WWW.AliSaler.Com

FM8 Hanks Intel Discrete GFX

VER : 3A
PWA:W021J
PWB:W018J

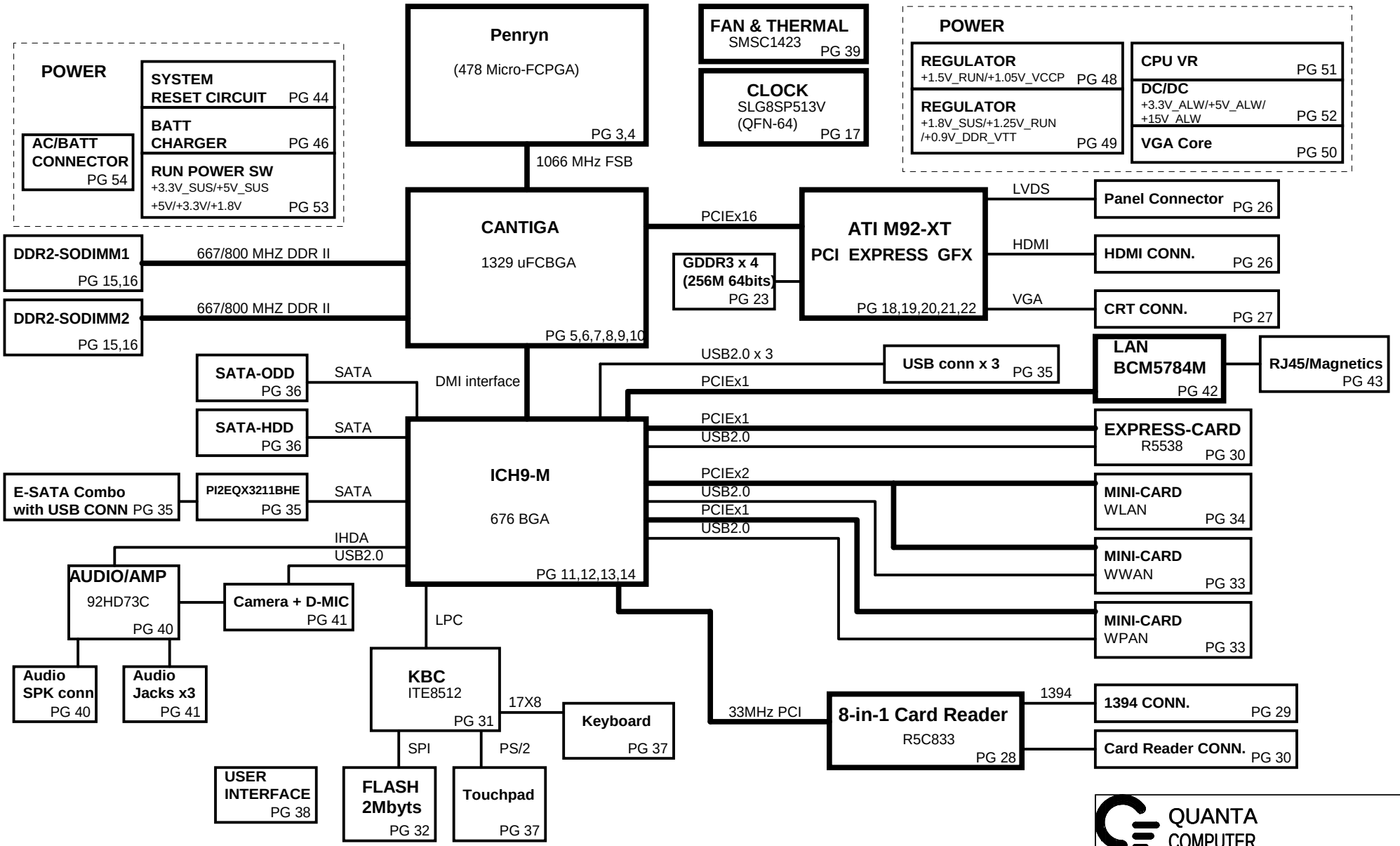

QUANTA COMPUTER

Title	Schematic Block Diagram1	
Size	Document Number FM8	Rev 2A
Date: Friday, November 21, 2008	Sheet 1 of 58	

WWW.AliSaler.Com

WWW.AliSaler.Com

Table of Contents

PAGE	DESCRIPTION
1	Schematic Block Diagram
2	Front Page
3-4	Penryn
5-10	Cantiga
11-14	ICH9M
15-16	DDRII SO-DIMM(200P)
17	Clock Generator
18-23	M92-S2-XT
24	BLANK PAGE
25	BLANK PAGE
26	LCD CONN / HDMI CONN
27	CRT CONN
28	5C833/PCI
29	IEEE1394
30	Express/Card Reader
31	SIO (ITE8512)
32	FLASH / RTC
33	MINI-Card (WPAN, WWAN)
34	MINI-Card (WLAN)
35	USB
36	SATA (HDD & CD_ROM)
37	TP / KEYBOARD
38	SWITCH / /LED
39	FAN / THERMAL
40	Azelia CODEC
41	AUDIO CONN
42	LAN (RTL8111B/8111C)
43	LAN RJ-45 / TRANSFORM
44	System Reset Circuit
45	Blank Page
46	Changer (MAX8731A)
47	Blank Page
48	1.05VCCP & 1.5VRUN
49	1.8VSUS & 0.9VTT
50	VGA_M82
51	CPU_ISL6266 (2PHASE)
52	MAX8744 (+5V,3.3V)
53	Run Power Switch
54	DCin & Batt
55	PAD & SCREW
56	EMI CAP
57	SMBUS BLOCK
58	Power Block Diagram

Power States

POWER PLANE	VOLTAGE	PAGE	DESCRIPTION	CONTROL SIGNAL	ACTIVE IN
+PWR_SRC	10V~+19V	4,26,32,34,46,48,49,50,51,52	MAIN POWER		S0~S5
+RTC_CELL	+3.0V~+3.3V	11,14,31,32	RTC		S0~S5
+3.3V_ALW	+3.3V	3,13,31,32,36,37,38,44,46,49,52,53,54	8051 POWER	ALWON	S0~S5
+5V_ALW2	+5V	38,48,49,52,53,54	LARGE POWER	RUN_ON	S0~S5
+3.3V_LAN	+3.3V	42,43	LAN POWER	AUX_ON	
+5V_SUS	+5V	14,35,36,38,50,51,52,53	SLP_S5# CTRLD POWER	SUS_ON	
+3.3V_SUS	+3.3V	3,11,12,13,14,20,26,30,38,43,48,50,51,53	SLP_S5# CTRLD POWER	SUS_ON	
+1.8V_SUS	+1.8V	6,8,9,15,48,49,50,53	SODIMM POWER	SUS_ON	
+0.9V_DDR_VTT	+0.9V	16,49,53	SODIMM POWER	RUN_ON	
+5V_RUN	+5V	14,20,26,27,36,37,39,40,41,53	SLP_S3# CTRLD POWER	RUN_ON	
+3.3V_RUN	+3.3V	3,6,8,9,11,12,13,14,15,17,20,22,26,27,28,30 ,31,33,34,36,39,40,41,42,51,53	SLP_S3# CTRLD POWER	RUN_ON	
+1.8V_RUN	+1.8V	19,20,21,22,23,38,53	SDVO POWER	RUN_ON	
+1.5V_RUN	+1.5V	4,9,14,30,31,33,34,48,53	CALISTOGA/ICH9 POWER	RUN_ON	
+1.2V_LOM	+1.25V	42	LOM POWER	+3.3V_LAN	
+1.1V_GFX_PCIE	+1.1V	21,50	VGA POWER	RUN_ON	
+1.05V_VCCP	+1.05V	3,4,5,6,8,9,11,14,48	CPU/CALISTOGA/ICH8 POWER	1.05V_RUN_ON	
+VCC_CORE	+0.7V~+1.77V	4,51	CPU CORE POWER	IMVP_VR_ON	
+LCDVCC	+3.3V	26	LCD Power	LCDVCC_TST_EN & ENVDD	
+5V_MOD	+5V	36	Module Power	MODC_EN	
+5V_HDD	+5V	36	HDD Power	HDDC_EN	

GND PLANE	PAGE	DESCRIPTION
GND_CHG	46	
GND_1.05V	47	
GND_VGA	50	
GND_SIGNAL	51	
AGND_DC/DC	52	
GND	ALL	

QUANTA COMPUTER

Title	Index & Power Status	
Size	Document Number FM8	Rev 2A
Date: Friday, November 21, 2008	Sheet 2 of 58	

WWW.AliSaler.Com

WWW.AliSaler.Com

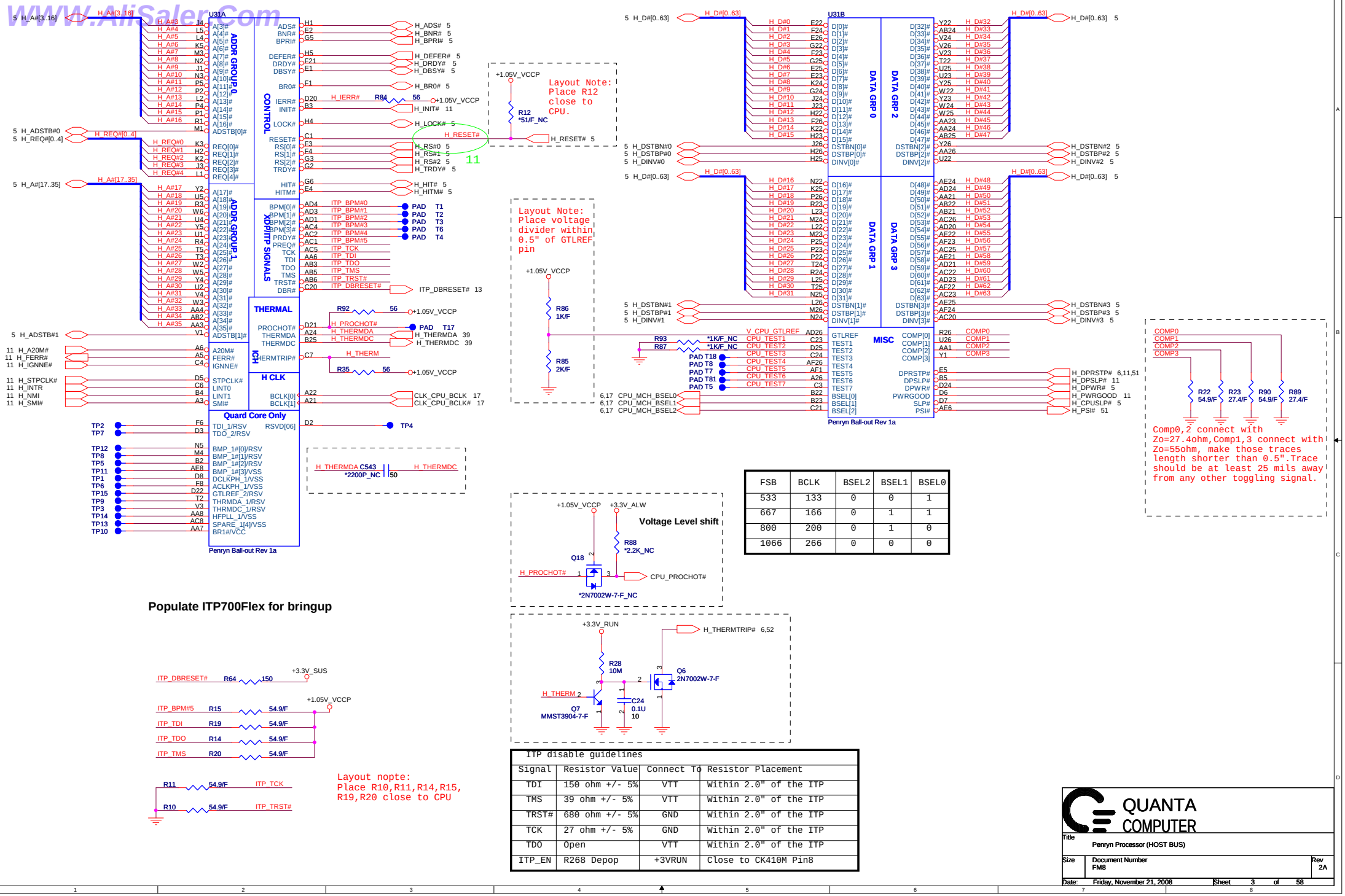

FSB	BCLK	BSEL2	BSEL1	BSEL0
533	133	0	0	1
667	166	0	1	1
800	200	0	1	0
1066	266	0	0	0

ITP disable guidelines

Signal	Resistor Value	Connect To	Resistor Placement
TDI	150 ohm +/- 5%	VTT	Within 2.0" of the ITP
TMS	39 ohm +/- 5%	VTT	Within 2.0" of the ITP
TRST#	680 ohm +/- 5%	GND	Within 2.0" of the ITP
TCK	27 ohm +/- 5%	GND	Within 2.0" of the ITP
TDO	Open	VTT	Within 2.0" of the ITP
ITP_EN	R268 Depop	+3VRUN	Close to CK410M Pin8

QUANTA COMPUTER

Title	Penryn Processor (HOST BUS)	
Size	Document Number FM8	Rev 2A
Date: Friday, November 21, 2008	Sheet 3 of 58	

WWW.AliSaler.Com

WWW.AliSaler.Com

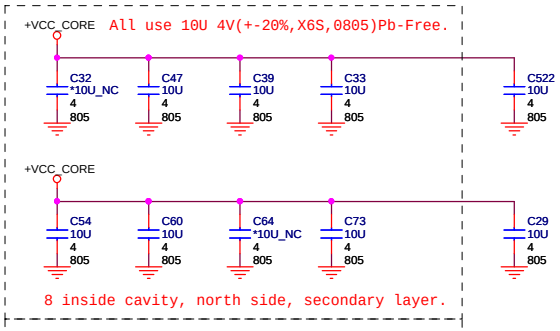

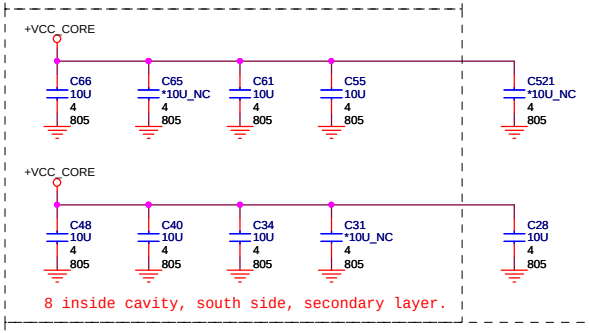

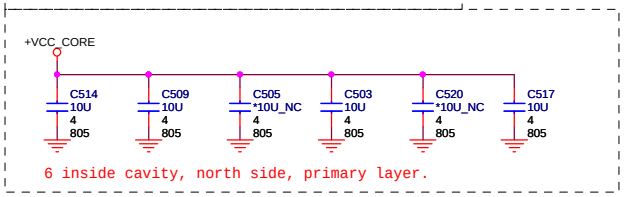

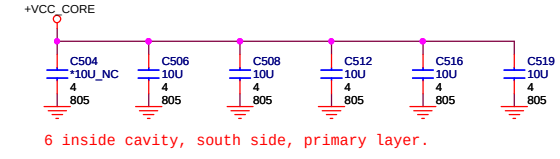

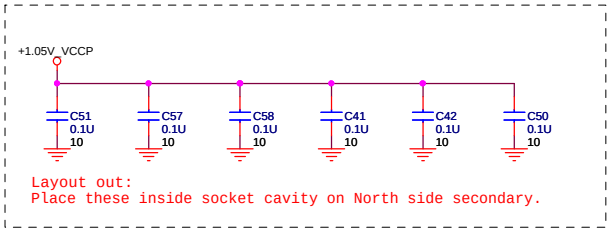

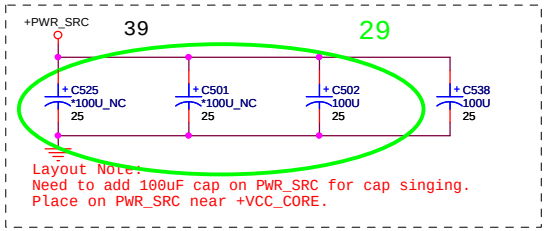

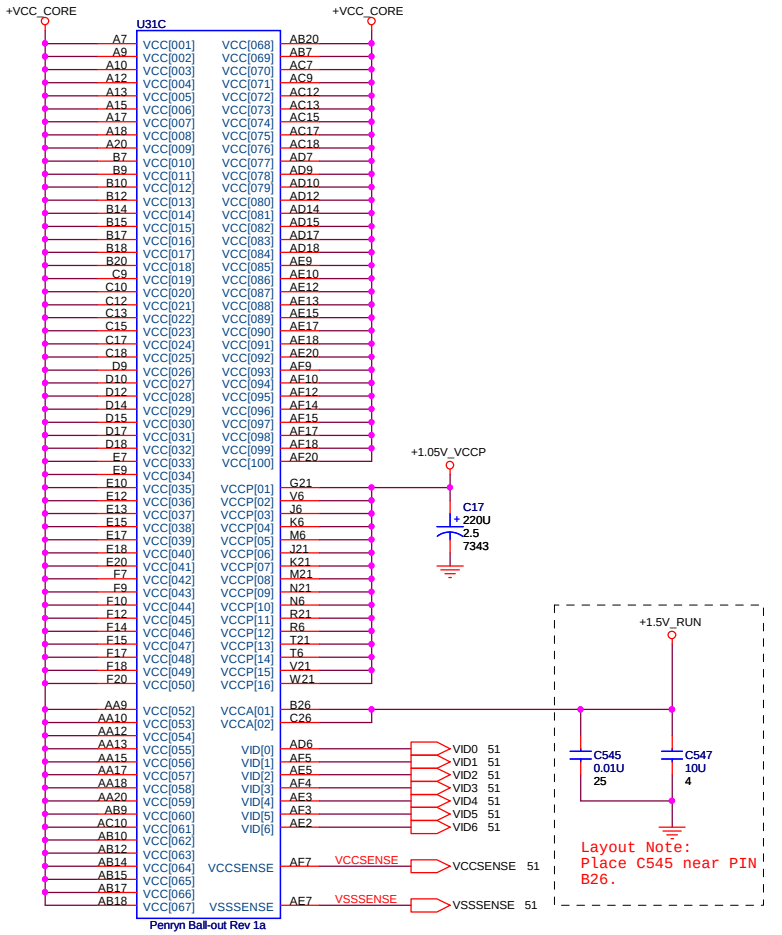

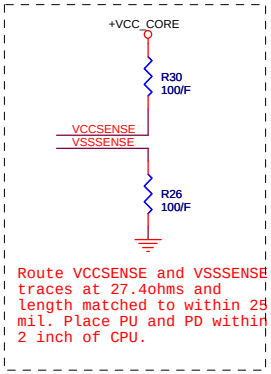

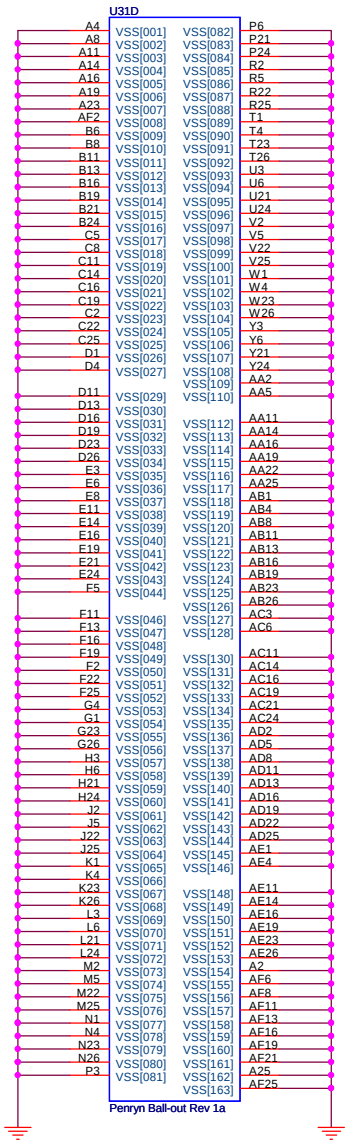

QUANTA COMPUTER

Title	Penryn Processor (HOST BUS)	
Size	Document Number FM8	Rev 2A
Date: Friday, November 21, 2008	Sheet 4 of 58	

WWW.AliSaler.Com

WWW.AliSaler.Com

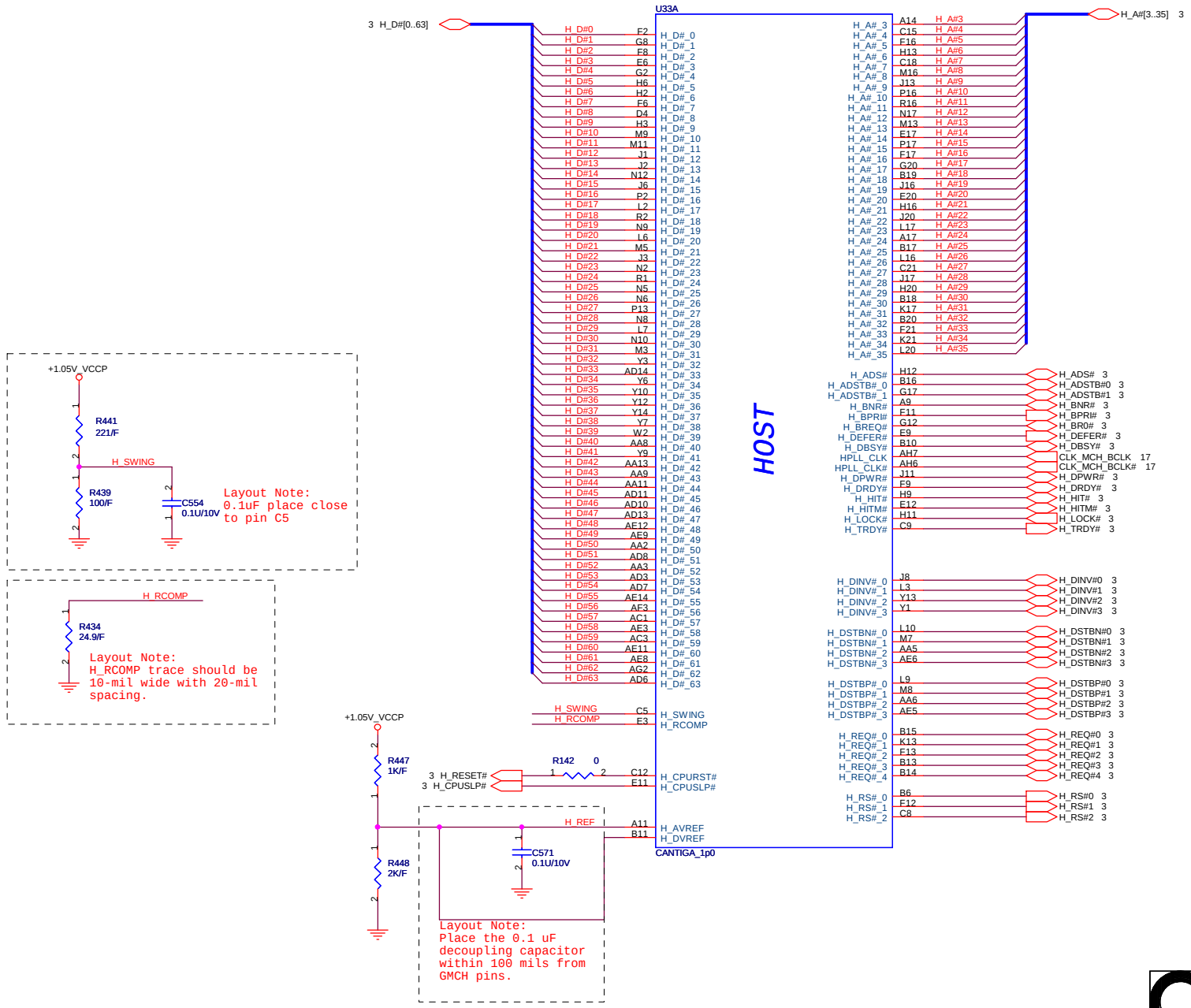

Title	Cantiga (HOST)
Size	Document Number FM8
Rev	2A
Date:	Friday, November 21, 2008
Sheet	5 of 58

WWW.AliSaler.Com

WWW.AliSaler.Com

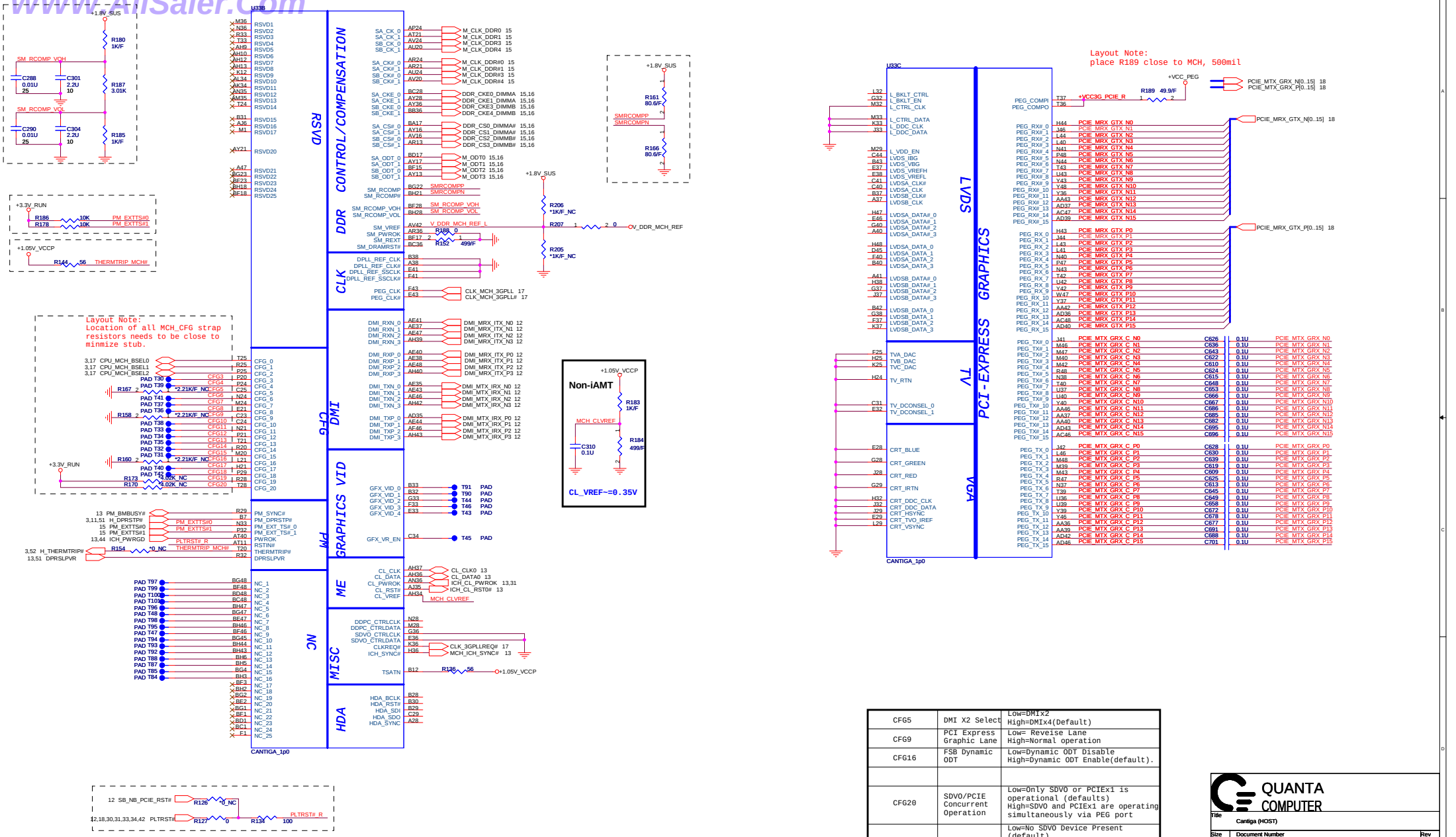

CFG5	DMI X2 Select	Low=DMIx2 High=DMIx4(Default)
CFG9	PCI Express Graphic Lane	Low= Reveise Lane High=Normal operation
CFG16	FSB Dynamic ODT	Low=Dynamic ODT Disable High=Dynamic ODT Enable(default).
CFG20	SDVO/PCIE Concurrent Operation	Low=Only SDVO or PCIEx1 is operational (defaults) High=SDVO and PCIEx1 are operating simultaneously via PEG port
SDVO_CRTL_DATA	SDVO Present.	Low=No SDVO Device Present (default) High=SDVO Device Present

QUANTA COMPUTER

Title	Cantiga (HOST)	
Size	Document Number FMB	Rev 2A
Date: Friday, November 21, 2008	Sheet 6 of 58	

WWW.AliSaler.Com

WWW.AliSaler.Com

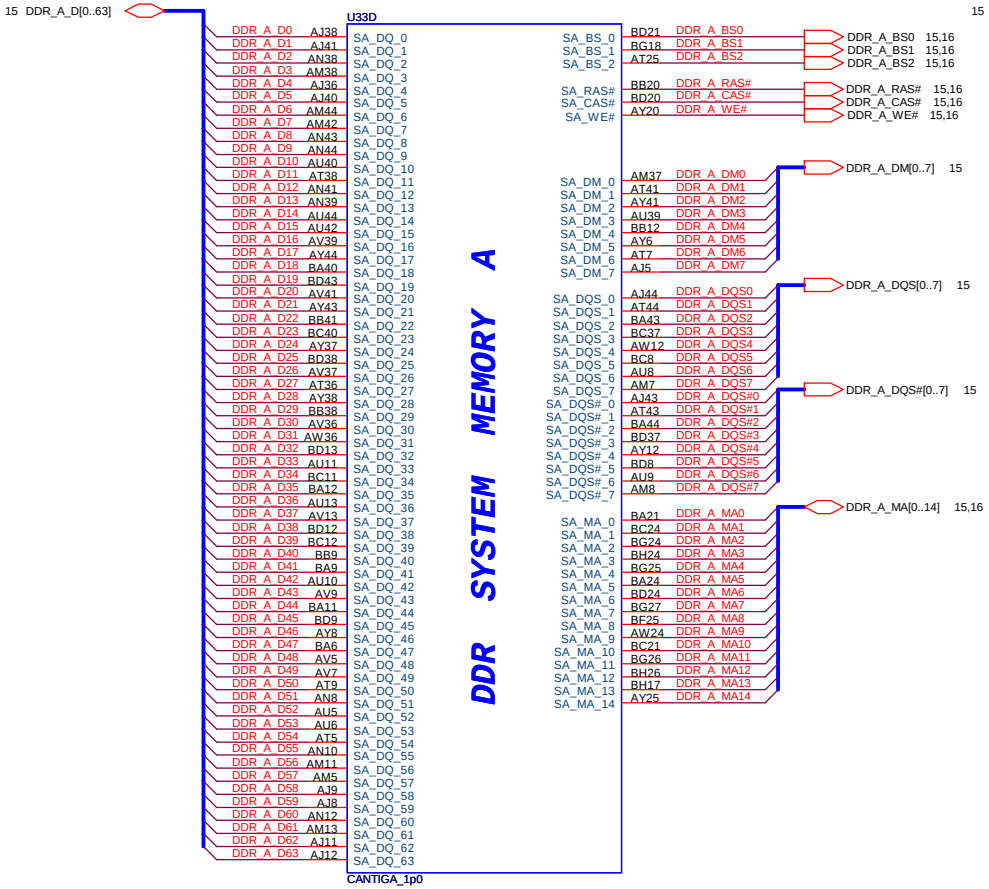

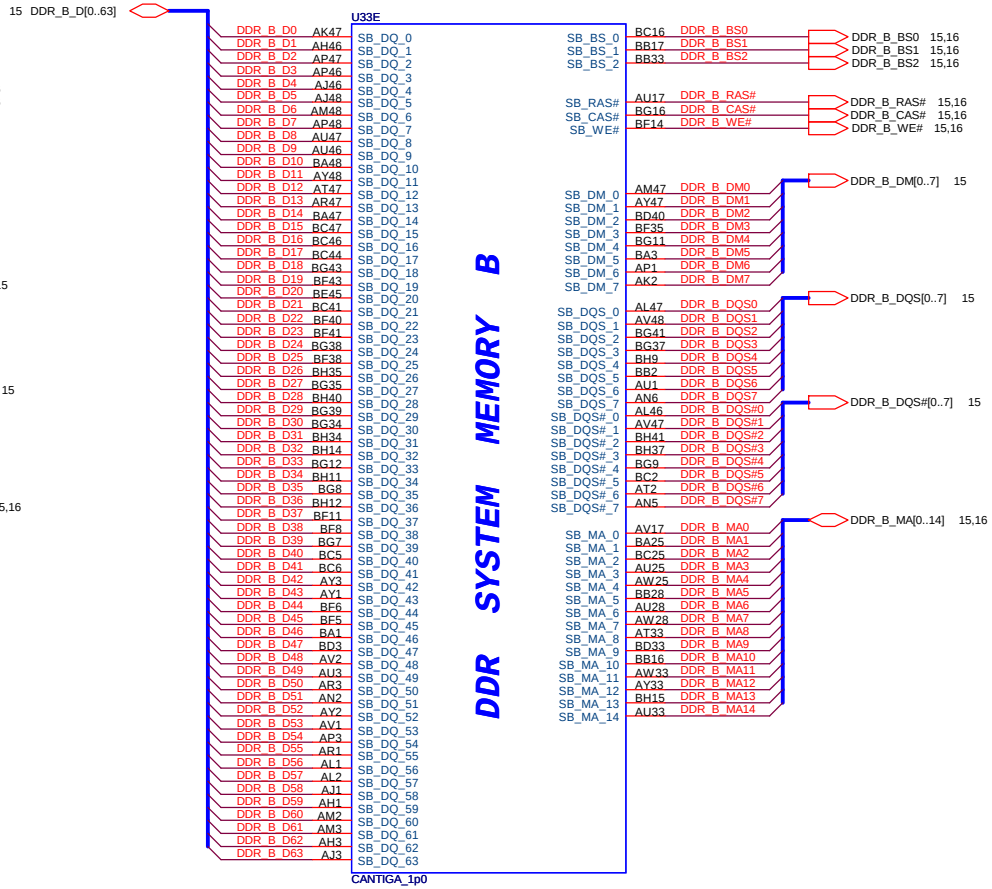

QUANTA COMPUTER		
Title	Cantiga (HOST)	
Size	Document Number FM8	Rev 2A
Date: Friday, November 21, 2008	Sheet 7 of 58	

WWW.AliSaler.Com

WWW.AliSaler.Com

U33G

+1.8V_SUS

2600mA

VCC SM POWER

AP33 VCC_SM_1
AN33 VCC_SM_2
BH32 VCC_SM_3
BG32 VCC_SM_4
BF32 VCC_SM_5
BD32 VCC_SM_6
BC32 VCC_SM_7
BB32 VCC_SM_8
BA32 VCC_SM_9
AY32 VCC_SM_10
AW32 VCC_SM_11
AV32 VCC_SM_12
AU32 VCC_SM_13
AT32 VCC_SM_14
AR32 VCC_SM_15
AP32 VCC_SM_16
AN32 VCC_SM_17
BH31 VCC_SM_18
BG31 VCC_SM_19
BF31 VCC_SM_20
BG30 VCC_SM_21
BH29 VCC_SM_22
BG29 VCC_SM_23
BF29 VCC_SM_24
BD29 VCC_SM_25
BC29 VCC_SM_26
BB29 VCC_SM_27
BA29 VCC_SM_28
AY29 VCC_SM_29
AW29 VCC_SM_30
AV29 VCC_SM_31
AU29 VCC_SM_32
AT29 VCC_SM_33
AR29 VCC_SM_34
AP29 VCC_SM_35

BA36 VCC_SM_36/NC
BB24 VCC_SM_37/NC
BD16 VCC_SM_38/NC
BB21 VCC_SM_39/NC
AW16 VCC_SM_40/NC
AW13 VCC_SM_41/NC
AT13 VCC_SM_42/NC

VCC GFX NCTF

VCC_AXG_NCTF_1 W28
VCC_AXG_NCTF_2 V28
VCC_AXG_NCTF_3 W26
VCC_AXG_NCTF_4 V26
VCC_AXG_NCTF_5 W25
VCC_AXG_NCTF_6 V25
VCC_AXG_NCTF_7 W24
VCC_AXG_NCTF_8 V24
VCC_AXG_NCTF_9 W23
VCC_AXG_NCTF_10 V23
VCC_AXG_NCTF_11 AM21
VCC_AXG_NCTF_12 AL21
VCC_AXG_NCTF_13 AK21
VCC_AXG_NCTF_14 W21
VCC_AXG_NCTF_15 V21
VCC_AXG_NCTF_16 U21
VCC_AXG_NCTF_17 AM20
VCC_AXG_NCTF_18 AK20
VCC_AXG_NCTF_19 W20
VCC_AXG_NCTF_20 U20
VCC_AXG_NCTF_21 AM19
VCC_AXG_NCTF_22 AL19
VCC_AXG_NCTF_23 AK19
VCC_AXG_NCTF_24 AJ19
VCC_AXG_NCTF_25 AH19
VCC_AXG_NCTF_26 AG19
VCC_AXG_NCTF_27 AF19
VCC_AXG_NCTF_28 AE19
VCC_AXG_NCTF_29 AB19
VCC_AXG_NCTF_30 AA19
VCC_AXG_NCTF_31 Y19
VCC_AXG_NCTF_32 W19
VCC_AXG_NCTF_33 V19
VCC_AXG_NCTF_34 U19
VCC_AXG_NCTF_35 AM17
VCC_AXG_NCTF_36 AK17
VCC_AXG_NCTF_37 AH17
VCC_AXG_NCTF_38 AG17
VCC_AXG_NCTF_39 AF17
VCC_AXG_NCTF_40 AE17
VCC_AXG_NCTF_41 AC17
VCC_AXG_NCTF_42 AB17
VCC_AXG_NCTF_43 Y17
VCC_AXG_NCTF_44 W17
VCC_AXG_NCTF_45 V17
VCC_AXG_NCTF_46 AM16
VCC_AXG_NCTF_47 AL16
VCC_AXG_NCTF_48 AK16
VCC_AXG_NCTF_49 AJ16
VCC_AXG_NCTF_50 AH16
VCC_AXG_NCTF_51 AG16
VCC_AXG_NCTF_52 AF16
VCC_AXG_NCTF_53 AE16
VCC_AXG_NCTF_54 AC16
VCC_AXG_NCTF_55 AB16
VCC_AXG_NCTF_56 AA16
VCC_AXG_NCTF_57 Y16
VCC_AXG_NCTF_58 W16
VCC_AXG_NCTF_59 V16
VCC_AXG_NCTF_60 U16

VCC GFX

Y26 VCC_AXG_1
AE25 VCC_AXG_2
AB25 VCC_AXG_3
AA25 VCC_AXG_4
AE24 VCC_AXG_5
AC24 VCC_AXG_6
AA24 VCC_AXG_7
Y24 VCC_AXG_8
AE23 VCC_AXG_9
AC23 VCC_AXG_10
AB23 VCC_AXG_11
AA23 VCC_AXG_12
AJ21 VCC_AXG_13
AG21 VCC_AXG_14
AE21 VCC_AXG_15
AC21 VCC_AXG_16
AA21 VCC_AXG_17
Y21 VCC_AXG_18
AH20 VCC_AXG_19
AF20 VCC_AXG_20
AE20 VCC_AXG_21
AC20 VCC_AXG_22
AB20 VCC_AXG_23
AA20 VCC_AXG_24
T17 VCC_AXG_25
T16 VCC_AXG_26
AM15 VCC_AXG_27
AL15 VCC_AXG_28
AE15 VCC_AXG_29
AJ15 VCC_AXG_30
AH15 VCC_AXG_31
AG15 VCC_AXG_32
AF15 VCC_AXG_33
AB15 VCC_AXG_34
AA15 VCC_AXG_35
Y15 VCC_AXG_36
V15 VCC_AXG_37
U15 VCC_AXG_38
AN14 VCC_AXG_39
AM14 VCC_AXG_40
U14 VCC_AXG_41
T14 VCC_AXG_42

40

+1.05V_VCCP

R147 *0_NC
R140 *0_NC

AJ14 VCC_AXG_SENSE
AH14 VSS_AXG_SENSE

VCC SM LF

VCC_SM_LF1 AV44 VCCSM_LF1
VCC_SM_LF2 BA37 VCCSM_LF2
VCC_SM_LF3 AM40 VCCSM_LF3
VCC_SM_LF4 AV21 VCCSM_LF4
VCC_SM_LF5 AY5 VCCSM_LF5
VCC_SM_LF6 AM10 VCCSM_LF6
VCC_SM_LF7 BB13 VCCSM_LF7

C243 0.1U/10V
C234 0.1U/10V
C216 0.22U/10V
C263 0.22U/10V
C325 0.47U/10V
C321 1U/10V
C351 1U/10V

CANTIGA_1p0

+3.3V_RUN

R97 10 +VCC_GMCH_L

D8 SDMK0340L-7-F

Layout Note:
Inside GMCH cavity.
Ivcc=1930.4+508.12=2438.52mA

+1.05V_VCCP

C546 220U 2.5 7343
C152 22U/4V
C217 0.22U/10V
C303 0.22U/10V
C266 0.1U/10V

Layout Note:
370 mils from edge.

+1.8V_SUS

C308 0.1U/10V
C629 220U/4V
C314 22U/4V
C307 22U/4V

Layout Note:
Place C308 where LVDS and DDR2 taps.

VCC_SM

Layout Note:
Place on the edge.

U33F

AG34 VCC_1
AC34 VCC_2
AB34 VCC_3
AA34 VCC_4
Y34 VCC_5
V34 VCC_6
U34 VCC_7
AM33 VCC_8
AK33 VCC_9
AJ33 VCC_10
AG33 VCC_11
AF33 VCC_12

AE33 VCC_13
AC33 VCC_14
AA33 VCC_15
Y33 VCC_16
W33 VCC_17
V33 VCC_18
U33 VCC_19
AH28 VCC_20
AF28 VCC_21
AC28 VCC_22
AA28 VCC_23
AJ26 VCC_24
AG26 VCC_25
AE26 VCC_26
AC26 VCC_27
AH25 VCC_28
AG25 VCC_29
AF25 VCC_30
AG24 VCC_31
AJ23 VCC_32
AH23 VCC_33
AF23 VCC_34

T32 VCC_35

VCC CORE POWER

+1.05V_VCCP

VCC NCTF

VCC_NCTF_1 AM32
VCC_NCTF_2 AL32
VCC_NCTF_3 AK32
VCC_NCTF_4 AJ32
VCC_NCTF_5 AH32
VCC_NCTF_6 AG32
VCC_NCTF_7 AE32
VCC_NCTF_8 AC32
VCC_NCTF_9 AA32
VCC_NCTF_10 Y32
VCC_NCTF_11 W32
VCC_NCTF_12 U32
VCC_NCTF_13 AM30
VCC_NCTF_14 AL30
VCC_NCTF_15 AK30
VCC_NCTF_16 AH30
VCC_NCTF_17 AG30
VCC_NCTF_18 AF30
VCC_NCTF_19 AE30
VCC_NCTF_20 AC30
VCC_NCTF_21 AB30
VCC_NCTF_22 AA30
VCC_NCTF_23 Y30
VCC_NCTF_24 W30
VCC_NCTF_25 V30
VCC_NCTF_26 U30
VCC_NCTF_27 AL29
VCC_NCTF_28 AK29
VCC_NCTF_29 AJ29
VCC_NCTF_30 AH29
VCC_NCTF_31 AG29
VCC_NCTF_32 AE29
VCC_NCTF_33 AC29
VCC_NCTF_34 AA29
VCC_NCTF_35 Y29
VCC_NCTF_36 W29
VCC_NCTF_37 V29
VCC_NCTF_38 AL28
VCC_NCTF_39 AK28
VCC_NCTF_40 AL26
VCC_NCTF_41 AK26
VCC_NCTF_42 AK25
VCC_NCTF_43 AK24
VCC_NCTF_44 AK23

CANTIGA_1p0

UMA: Places R140,R147 to 10 ohm.
Dis: Please R140,R147 to 0 ohm.

QUANTA COMPUTER

Title	Cantiga (HOST)	
Size	Document Number FM8	Rev 2A
Date: Friday, November 21, 2008	Sheet 8 of 58	

WWW.AliSaler.Com

WWW.AliSaler.Com

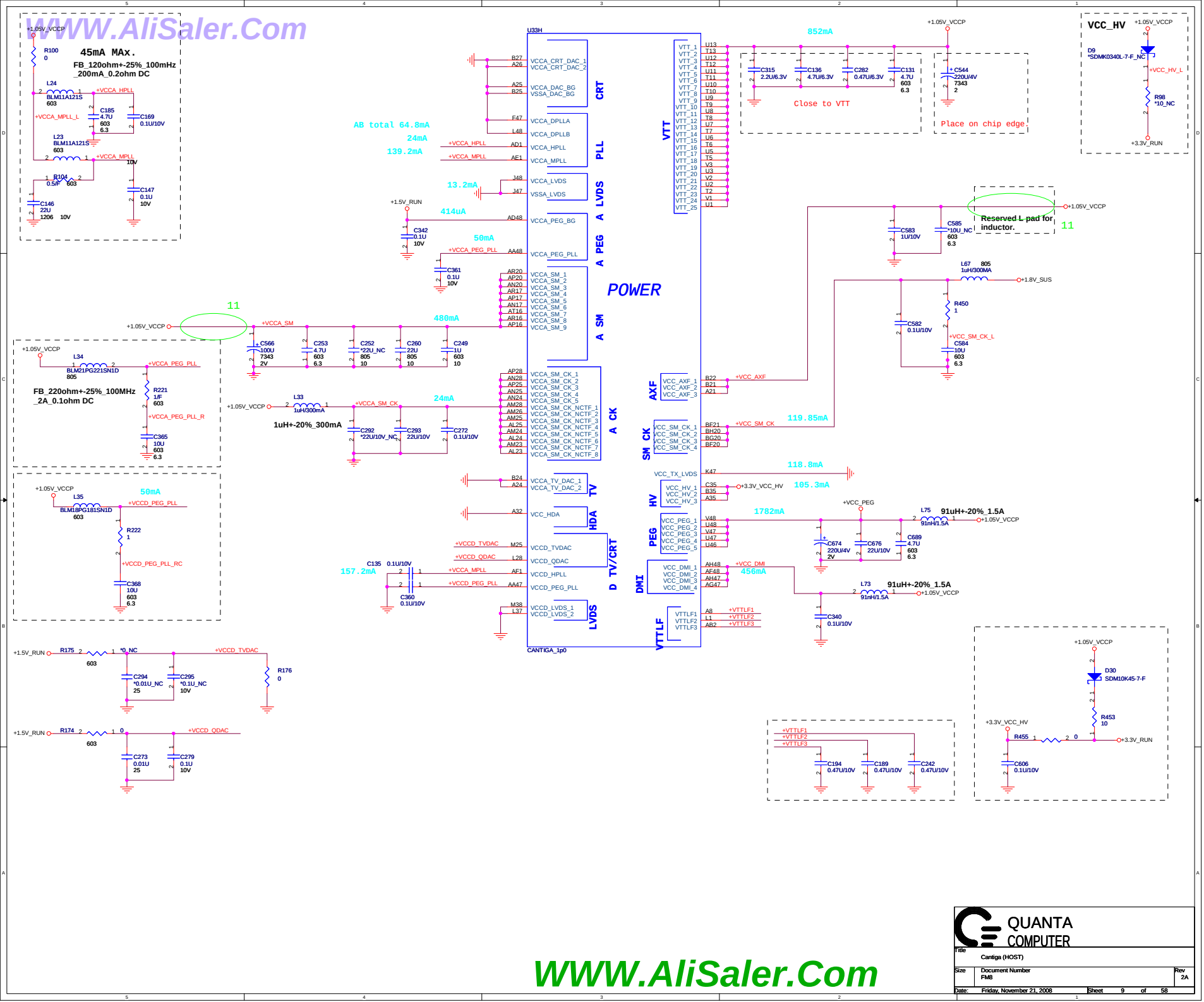

WWW.AliSaler.Com

QUANTA COMPUTER			
Title	Cantiga (HOST)		
Size	Document Number FM8		Rev 2A
Date: Friday, November 21, 2008		Sheet 9 of 58	

WWW.AliSaler.Com

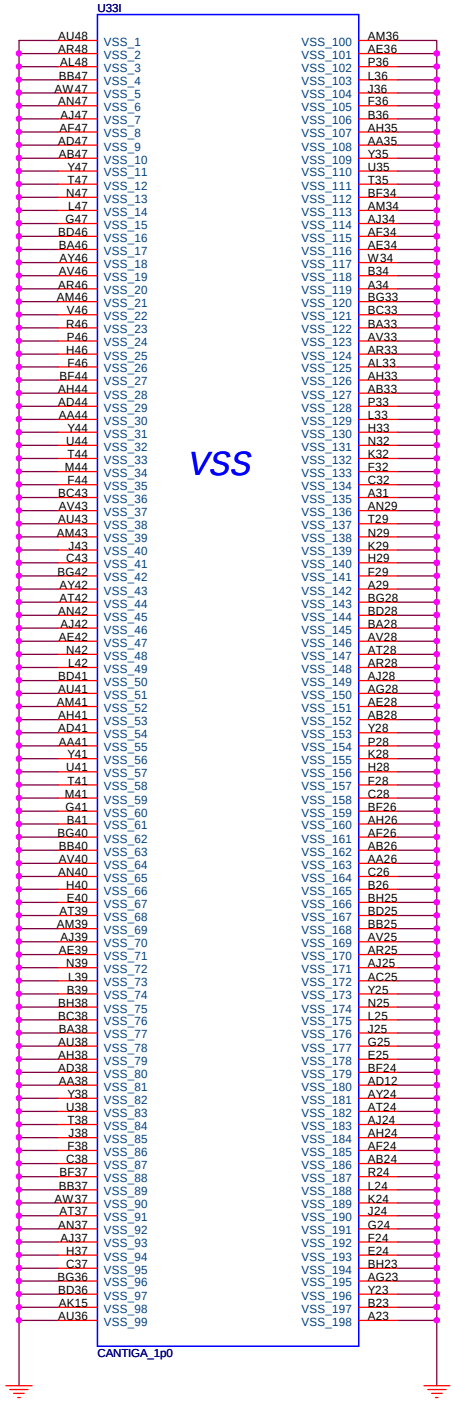

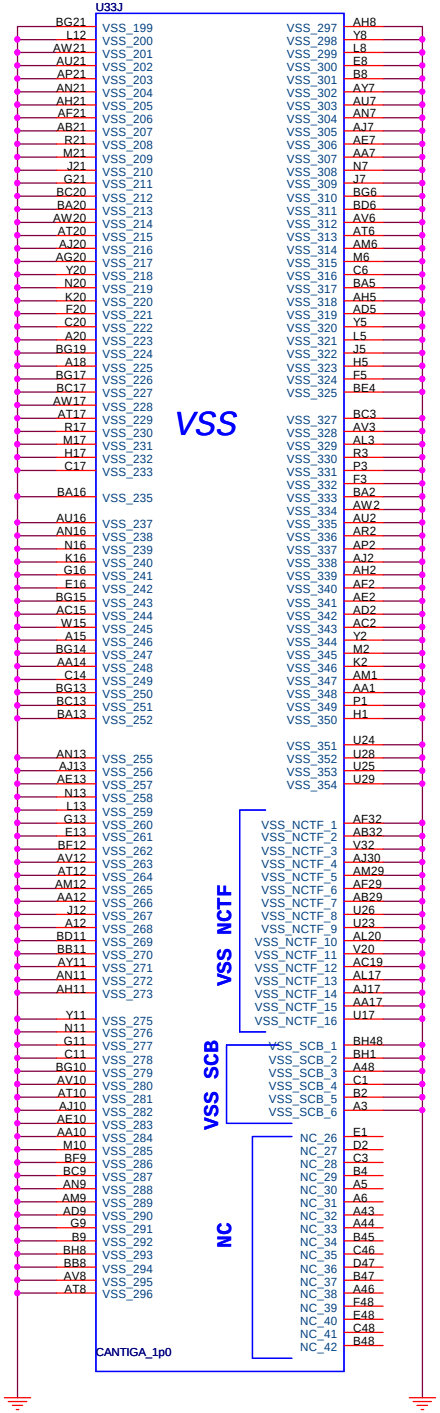

Title	Cantiga (HOST)
Size	Document Number FM8
Rev	2A
Date:	Friday, November 21, 2008
Sheet	10 of 58

WWW.AliSaler.Com

WWW.AliSaler.Com

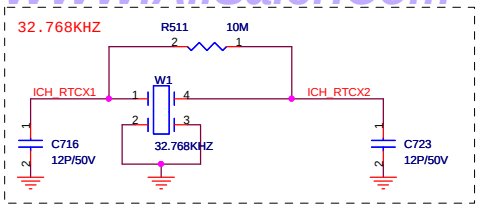

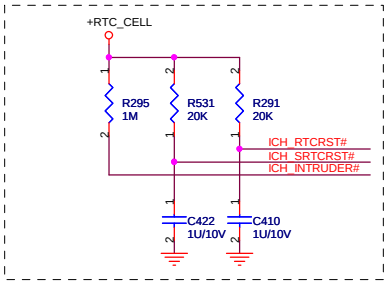

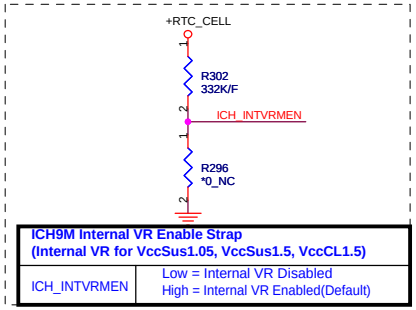

ICH9M Internal VR Enable Strap (Internal VR for VccSus1.05, VccSus1.5, VccCL1.5)	
ICH_INTVRMEN	Low = Internal VR Disabled High = Internal VR Enabled(Default)

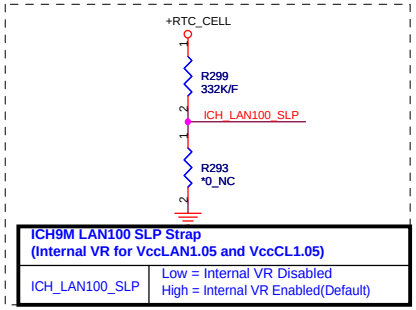

ICH9M LAN100 SLP Strap (Internal VR for VccLAN1.05 and VccCL1.05)	
ICH_LAN100_SLP	Low = Internal VR Disabled High = Internal VR Enabled(Default)

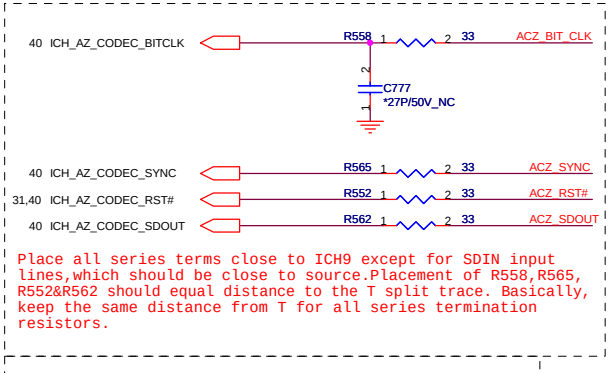

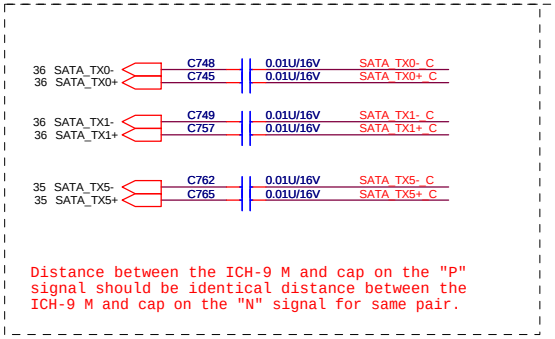

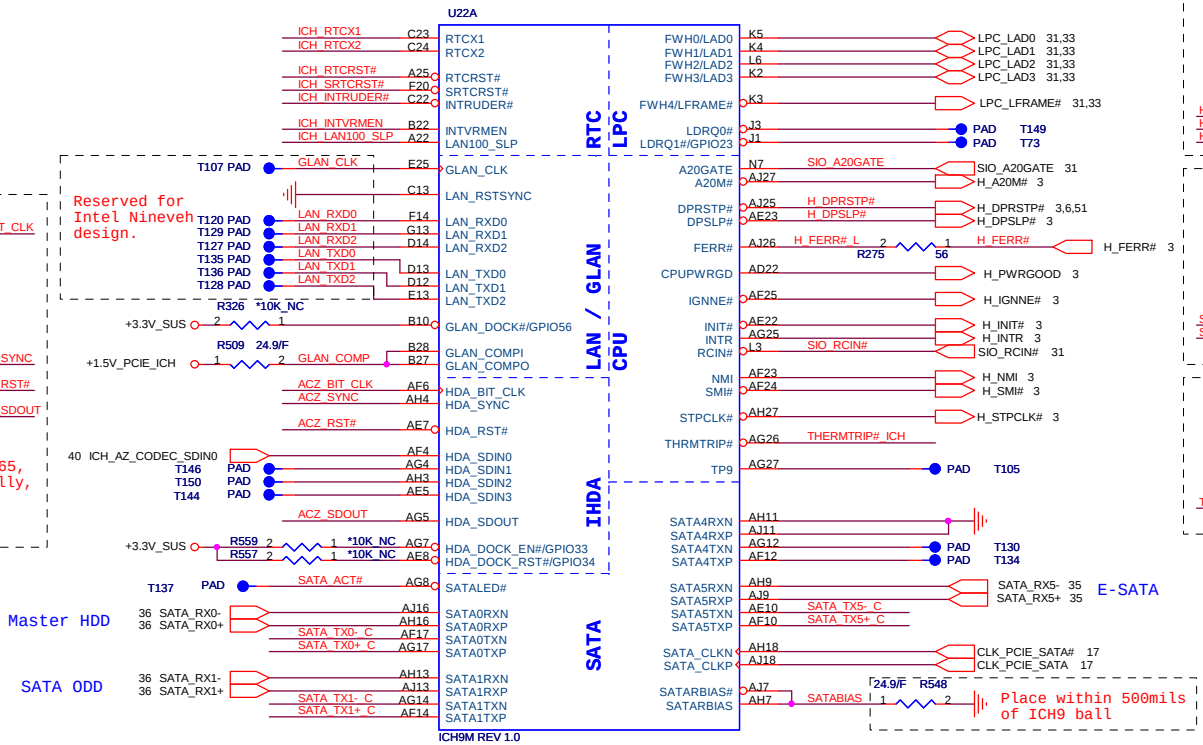

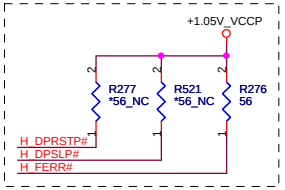

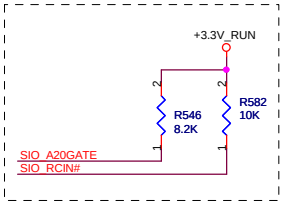

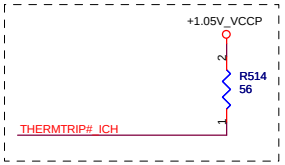

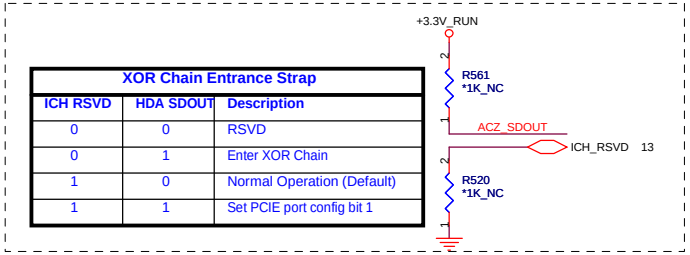

XOR Chain Entrance Strap		
ICH RSVD	HDA SDOUT	Description
0	0	RSVD
0	1	Enter XOR Chain
1	0	Normal Operation (Default)
1	1	Set PCIE port config bit 1

QUANTA COMPUTER

Title	ICH9-M (CPU,IDE,SATA,LPC,AC97,LAN)	
Size	Document Number FM8	Rev 2A
Date: Friday, November 21, 2008	Sheet 11 of 58	

WWW.AliSaler.Com

WWW.AliSaler.Com

Place TX DC blocking caps close ICH9.

33 PCIE_TX1- / 33 PCIE_TX1+ — C717 0.1U 10 PCIE_TXN1_C; C718 0.1U 10 PCIE_TXP1_C
34 PCIE_TX2- / 34 PCIE_TX2+ — C714 0.1U 10 PCIE_TXN2_C; C715 0.1U 10 PCIE_TXP2_C
33 PCIE_TX3- / 33 PCIE_TX3+ — C712 0.1U 10 PCIE_TXN3_C; C713 0.1U 10 PCIE_TXP3_C
30 PCIE_TX4- / 30 PCIE_TX4+ — C711 0.1U 10 PCIE_TXN4_C; C710 0.1U 10 PCIE_TXP4_C
42 PCIE_TX6-/GLAN_TX- / 42 PCIE_TX6+/GLAN_TX+ — C721 0.1U 10 GLAN_TXN_C; C722 0.1U 10 GLAN_TXP_C

ICH_SPI_CS1#_R
PCI_GNT0#
R560 *1K_NC
R519 *1K_NC

Boot BIOS Strap

		GNT0#	SPI_CS1#
LPC	11	No stuff	No stuff
PCI	10	No stuff	Stuff
SPI	01	Stuff	No stuff

U22D

33 PCIE_RX1- / 33 PCIE_RX1+ — MiniWWAN — PCIE_TXN1_C / PCIE_TXP1_C — N29 N28 — PERN1 PERP1 PETN1 PETP1
34 PCIE_RX2- / 34 PCIE_RX2+ — MiniWLAN — PCIE_TXN2_C / PCIE_TXP2_C — L29 L28 M27 M26 — PERN2 PERP2 PETN2 PETP2
33 PCIE_RX3- / 33 PCIE_RX3+ — MiniWPAN — PCIE_TXN3_C / PCIE_TXP3_C — J29 J28 K27 K26 — PERN3 PERP3 PETN3 PETP3
30 PCIE_RX4- / 30 PCIE_RX4+ — Express Card — PCIE_TXN4_C / PCIE_TXP4_C — G29 G28 H27 H26 — PERN4 PERP4 PETN4 PETP4
T55 PAD, T104 PAD, T106 PAD, T108 PAD — E29 E28 F27 F26 — PERN5 PERP5 PETN5 PETP5
42 PCIE_RX6-/GLAN_RX- / 42 PCIE_RX6+/GLAN_RX+ — Giga Bit LOM — GLAN_TXN_C / GLAN_TXP_C — C29 C28 D27 D26 — PERN6/GLAN_RXN PERP6/GLAN_RXP PETN6/GLAN_TXN PETP6/GLAN_TXP

PCI-Express

T112 PAD, T111 PAD — D23 D24 F23 — SPI_CLK SPI_CS0# SPI_CS1#/GPIO58/CLKGPIO6
T110 PAD, T109 PAD — D25 E23 — SPI_MOSI SPI_MISO

SPI

35 USB_OC0_1# — USB_OC0_1# — N4
35 USB_OC2# — USB_OC2# — N5 N6 P6 M1 N2 M4 M3 N3 N1 P5 P3 — OC0#/GPIO59 OC1#/GPIO40 OC2#/GPIO41 OC3#/GPIO42 OC4#/GPIO43 OC5#/GPIO29 OC6#/GPIO30 OC7#/GPIO31 OC8#/GPIO44 OC9#/GPIO45 OC10#/GPIO46 OC11#/GPIO47

USB

Places within 500 mils of the ICH9
R338 22.6/F — USBRBIAS — AG2 AG1 — USBRBIAS USBRBIAS#

ICH9M REV 1.0

Direct Media Interface

DMI0RXN V27 — DMI_MTX_IRX_N0 6
DMI0RXP V26 — DMI_MTX_IRX_P0 6
DMI0TXN U29 — DMI_MRX_ITX_N0 6
DMI0TXP U28 — DMI_MRX_ITX_P0 6
DMI1RXN Y27 — DMI_MTX_IRX_N1 6
DMI1RXP Y26 — DMI_MTX_IRX_P1 6
DMI1TXN W29 — DMI_MRX_ITX_N1 6
DMI1TXP W28 — DMI_MRX_ITX_P1 6
DMI2RXN AB27 — DMI_MTX_IRX_N2 6
DMI2RXP AB26 — DMI_MTX_IRX_P2 6
DMI2TXN AA29 — DMI_MRX_ITX_N2 6
DMI2TXP AA28 — DMI_MRX_ITX_P2 6
DMI3RXN AD27 — DMI_MTX_IRX_N3 6
DMI3RXP AD26 — DMI_MTX_IRX_P3 6
DMI3TXN AC29 — DMI_MRX_ITX_N3 6
DMI3TXP AC28 — DMI_MRX_ITX_P3 6
DMI_CLKN T26 — CLK_PCIE_ICH# 17
DMI_CLKP T25 — CLK_PCIE_ICH 17
DMI_ZCOMP AE29
DMI_IRCOMP AF28 — DMI_COMP — R265 1 2 24.9/F — +1.5V_PCIE_ICH

Place within 500mils of ICH9

USBP0N AC5 — ICH_USBP0- 35
USBP0P AC4 — ICH_USBP0+ 35
USBP1N AD3 — ICH_USBP1- 35
USBP1P AD2 — ICH_USBP1+ 35
USBP2N AC1 — ICH_USBP2- 35
USBP2P AC2 — ICH_USBP2+ 35
USBP3N AA5
USBP3P AA4
USBP4N AB2 — ICH_USBP4- 34
USBP4P AB3 — ICH_USBP4+ 34
USBP5N AA1 — ICH_USBP5- 33
USBP5P AA2 — ICH_USBP5+ 33
USBP6N W5 — ICH_USBP6- 33
USBP6P W4 — ICH_USBP6+ 33
USBP7N Y3 — ICH_USBP7- 30
USBP7P Y2 — ICH_USBP7+ 30
USBP8N W1 — PAD T71
USBP8P W2 — PAD T72
USBP9N V2 — PAD T151
USBP9P V3 — PAD T148
USBP10N U5 — PAD T142
USBP10P U4 — PAD T145
USBP11N U1 — ICH_USBP11- 41
USBP11P U2 — ICH_USBP11+ 41

Side pair Top / left
Side pair bottom / left
Side pair top/right(DB)
Mini Card (WLAN)
Mini Card (WWAN)
Mini Card (WPAN)
Express Card
Camera

PCI Pullups

RP43: PCI_FRAME# PCI_TRDY# PCI_DEVSEL# PCI_REQ1# +3.3V_RUN — PCI_PLOCK# PCI_STOP# PCI_PIRQD# PCI_IRDY#
RP44: PCI_PIRQA# PCI_SERR# PCI_REQ0# ICH_IRQH_GPIO5 +3.3V_RUN — PCI_PIRQB# PCI_PIRQC# PCI_PERR#

WWAN Noise - ICH improvements

OC6# C788 *0.1U_NC; OC4# C462 *0.1U_NC; OC5# C464 *0.1U_NC; OC7# C465 *0.1U_NC; OC8# C463 *0.1U_NC; USB_OC2# C807 *0.1U_NC; USB_OC0_1# C786 *0.1U_NC; OC9# C789 *0.1U_NC

RP45 10KX8: OC7# OC6# OC5# OC4# +3.3V_SUS — OC9# USB_OC2# USB_OC0_1# OC8#
OC10# R543 10K; OC11# R563 10K; OC3# R556 10K — +3.3V_SUS

SB_WPAN_PCIE_RST# R555 20K
SB_WWAN_PCIE_RST# R540 20K
SB_WLAN_PCIE_RST# R549 20K
SB_LOM_PCIE_RST# R554 20K
SB_NB_PCIE_RST# R352 20K

BIOS should not enable the internal GPIO pull up resistor.

28 PCI_AD[0..31]

U22B

PCI_AD0 D11 — AD0
PCI_AD1 C8 — AD1
PCI_AD2 D9 — AD2
PCI_AD3 E12 — AD3
PCI_AD4 E9 — AD4
PCI_AD5 C9 — AD5
PCI_AD6 E10 — AD6
PCI_AD7 B7 — AD7
PCI_AD8 C7 — AD8
PCI_AD9 C5 — AD9
PCI_AD10 G11 — AD10
PCI_AD11 F8 — AD11
PCI_AD12 F11 — AD12
PCI_AD13 E7 — AD13
PCI_AD14 A3 — AD14
PCI_AD15 D2 — AD15
PCI_AD16 F10 — AD16
PCI_AD17 D5 — AD17
PCI_AD18 D10 — AD18
PCI_AD19 B3 — AD19
PCI_AD20 F7 — AD20
PCI_AD21 C3 — AD21
PCI_AD22 F3 — AD22
PCI_AD23 F4 — AD23
PCI_AD24 C1 — AD24
PCI_AD25 G7 — AD25
PCI_AD26 H7 — AD26
PCI_AD27 D1 — AD27
PCI_AD28 G5 — AD28
PCI_AD29 H6 — AD29
PCI_AD30 G1 — AD30
PCI_AD31 H3 — AD31

PCI

REQ0# F1 — PCI_REQ0# — PCI_REQ0# 28
GNT0# G4 — PCI_GNT0# — PCI_GNT0# 28
REQ1#/GPIO50 B6 — PCI_REQ1# — PAD T143
GNT1#/GPIO51 A7 — PCI_GNT1# — PAD T67
REQ2#/GPIO52 E13 — SB_WWAN_PCIE_RST# — SB_WWAN_PCIE_RST# 33
GNT2#/GPIO53 E12 — PCI_GNT2# — PAD T133
REQ3#/GPIO54 E6 — SB_LOM_PCIE_RST# — SB_LOM_PCIE_RST# 42
GNT3#/GPIO55 F6 — PCI_GNT3# — PAD T139

C/BE0# D8 — PCI_C_BE0# — PCI_C_BE0# 28
C/BE1# B4 — PCI_C_BE1# — PCI_C_BE1# 28
C/BE2# D6 — PCI_C_BE2# — PCI_C_BE2# 28
C/BE3# A5 — PCI_C_BE3# — PCI_C_BE3# 28

IRDY# D3 — PCI_IRDY# — PCI_IRDY# 28
PAR E3 — PCI_PAR — PCI_PAR 28
PCIRST# R1 — PCI_RST# G
DEVSEL# C6 — PCI_DEVSEL# — PCI_DEVSEL# 28
PERR# E4 — PCI_PERR# — PCI_PERR# 28
PLOCK# C2 — PCI_PLOCK# — PCI_PLOCK#
SERR# J4 — PCI_SERR# — PCI_SERR# 28
STOP# A4 — PCI_STOP# — PCI_STOP# 28
TRDY# F5 — PCI_TRDY# — PCI_TRDY# 28
FRAME# D7 — PCI_FRAME# — PCI_FRAME# 28

PLTRST# C14 — PCI_PLTRST#
PCICLK D4 — CLK_PCI_ICH — CLK_PCI_ICH 17
PME# R2 — ICH_PME# 28

Interrupt I/F

T152 PAD — PCI_PIRQA# — PIRQA# J5
28 PCI_PIRQB# — PCI_PIRQB# — PIRQB# E1
28 PCI_PIRQC# — PCI_PIRQC# — PIRQC# J6
T147 PAD — PCI_PIRQD# — PIRQD# C4

PIRQE#/GPIO2 H4 — SB_WPAN_PCIE_RST# — SB_WPAN_PCIE_RST# 33
PIRQF#/GPIO3 K6 — SB_WLAN_PCIE_RST# — SB_WLAN_PCIE_RST# 34
PIRQG#/GPIO4 F2 — SB_NB_PCIE_RST# — SB_NB_PCIE_RST# 6
PIRQH#/GPIO5 G2 — ICH_IRQH_GPIO5 — PAD T154

ICH9M REV 1.0

CLK_PCI_ICH — R564 *10_NC — C783 *8.2P_NC
Reserved for EMI.Place resister and cap close to ICH. 16

PCI_GNT3# — R553 *1K_NC

A16 away override strap.

SB_NB_PCIE_RST#	Low = A16 swap override enabled. High = Default.

Non-iAMT

+3.3V_SUS — C453 0.047U 10 — U28 TC7SZ32FU(T5L,F,T)
PCI_RST# G — PCI_RST# 28
Add Buffers as needed for Loading and fanout concerns.
+3.3V_SUS — C775 0.047U 10 — U23 TC7SZ32FU(T5L,F,T)
PCI_PLTRST# — PLTRST# 6,18,30,31,33,34,42

QUANTA COMPUTER

Title	ICH9-M (USB,DMI,PCIE,PCI)	
Size	Document Number FM8	Rev 2A
Date: Friday, November 21, 2008	Sheet 12 of 58	

WWW.AliSaler.Com

WWW.AliSaler.Com

Non-iAMT

+3.3V_SUS

RP41 2.2KX2: 1-3 ICH_SMBCLK, 2-4 ICH_SMBDATA

Non-iAMT

+3.3V_SUS

R539 *10K_NC RSV_ICH_CL_RST1#
R533 10K ICH_RI#
R320 10K SIO_EXT_SCI#
R524 1K PCIE_WAKE#

Non-iAMT ASF 2.0

+3.3V_SUS

RP40 *10KX2_NC: 1-3 ICH_SMLINK0, 2-4 ICH_SMLINK1

ICH_SMBCLK R538 0 ICH_SMLINK0
ICH_SMBDATA R535 0 ICH_SMLINK1

+3.3V_RUN

R580 8.2K CLKRUN#
R581 *10_NC

Option to " Disable " clkrun. Pulling it down will keep the clks running.

Place these close to ICH9.

CLK_ICH_48M — R566 *10_NC — C795 *4.7P_NC — 50
CLK_ICH_14M — R353 *10_NC — C461 *4.7P_NC — 50

+3.3V_RUN — R518 8.2K

U22C — ICH9M REV 1.0

SMB
- 30,33,34 ICH_SMBCLK → SMBCLK G16
- 30,33,34 ICH_SMBDATA → SMBDATA A13
- T121 PAD → RSV_ICH_CL_RST1# LINKALERT#/GPIO60/CLGPIO5 E17
- T126 PAD → ICH_SMLINK0 SMLINK0 C17
- T125 PAD → ICH_SMLINK1 SMLINK1 B18

SATA GPIO
- SATA0GP/GPIO21 AH23
- SATA1GP/GPIO19 AF19
- SATA4GP/GPIO36 AE21
- SATA5GP/GPIO37 AD20

iClocks
- CLK14 H1 — CLK_ICH_14M — CLK_ICH_14M 17
- CLK48 AF3 — CLK_ICH_48M — CLK_ICH_48M 17
- SUSCLK P1 — ICH_SUSCLK — PAD T74

SYS GPIO / Power MGT
- ICH_RI# → RI# F19
- RSV_LPCPD# → SUS_STAT#/LPCPD# R4
- 3 ITP_DBRESET# → SYS_RESET# G19
- 6 PM_BMBUSY# → PMSYNC#/GPIO0 M6
- 34 USB_MCARD1_DET# → USB_MCARD1_DET# → SMBALERT#/GPIO11 A17
- 17 H_STP_PCI# → STP_PCI#/GPIO15 A14
- 17 H_STP_CPU# → STP_CPU#/GPIO25 E19
- 28,31 CLKRUN# → CLKRUN#/GPIO32 L4
- 30,33,34,42 PCIE_WAKE# → PCIE_WAKE# E20
- 28,31 IRQ_SERIRQ → IRQ_SERIRQ → SERIRQ M5
- 39 THERM_ALERT# → THERM_ALERT# → THRM# AJ23
- 31,44,51 IMVP_PWRGD → IMVP_PWRGD → VRMPWRGD D21
- T59 PAD → TP8 A20

SLP_S3# C16 — SIO_SLP_S3# 31
SLP_S4# E16 — PAD T123
SLP_S5# G17 — SIO_SLP_S5# 31
S4_STATE#/GPIO26 C10
PWROK G20 — ICH_PWRGD — ICH_PWRGD 6,44
DPRSLPVR — DPRSLPVR 6,51
DPRSLPVR/GPIO16 M2
BATLOW# B13 — ICH_BATLOW# — R321 8.2K — +3.3V_SUS
PWRBTN# R3 — SIO_PWRBTN# 31
LAN_RST# D20 — RSV_ICH_LAN_RST# — PAD T113
RSMRST# D22 — ICH_RSMRST# — ICH_RSMRST# 31
CK_PWRGD R5 — CLK_PWRGD 17
CLPWROK R6 — ICH_CL_PWROK — ICH_CL_PWROK 6,31
SLP_M# B16 — PAD T62

GPIO Controller Link
- 33 USB_MCARD2_DET# → USB_MCARD2_DET# AG19
- 33 USB_MCARD3_DET# → USB_MCARD3_DET# AH21
- 31 SIO_EXT_WAKE# AG21
- 31 SIO_EXT_SMI# → SIO_EXT_SMI# A21
- 31 SIO_EXT_SCI# → SIO_EXT_SCI# C12
- T61 PAD C21
- 37 KB_LED_DET# / 34 PCIE_MCARD1_DET# → PCIE_MCARD1_DET# → R354 4.7K AE18
- 33 PCIE_MCARD2_DET# → PCIE_MCARD2_DET# K1
- 33 PCIE_MCARD3_DET# → PCIE_MCARD3_DET# AF8
- 34 WLAN_RADIO_DIS# AJ22
- T116 PAD A9
- 17 SATA_CLKREQ# D19
- 18 PLTRST_DELAY# → PLTRST_DELAY# L1
- 33 WPAN_RADIO_DIS_MINI# AE19
- 33 WWAN_RADIO_DIS# AG22
- T56 PAD AE21
- T68 PAD AH24
- A8

TACH1/GPIO1, TACH2/GPIO6, TACH3/GPIO7, GPIO8, LANPHYPC/GPIO12, ENGDET/GPIO13, TACH0/GPIO17, GPIO18, GPIO20, SCLOCK/GPIO22, QRT_STATE0/GPIO27, QRT_STATE1/GPIO28, SATACLKREQ#/GPIO35, SLOAD/GPIO38, SDATAOUT0/GPIO39, SDATAOUT1/GPIO48, GPIO49, GPIO57/CLGPIO5

CL_CLK0 F24 — CL_CLK0 6
CL_CLK1 B19 — RSV_ICH_CL_CLK1 — PAD T118
CL_DATA0 F22 — CL_DATA0 6
CL_DATA1 C19 — RSV_ICH_CL_DATA1 — PAD T115
CL_VREF0 C25 — CL_VREF0
CL_VREF1 A19 — CL_VREF1
CL_RST0# F21 — ICH_CL_RST0# — 6
CL_RST1# D18 — CL_RST1# — PAD T122

MEM_LED/GPIO24 A16 — RSV_GPIO24 — PAD T63
ALERT#/GPIO10 C18 — RSV_GPIO10 — PAD T117
NETDETECT/GPIO14 C11 — RSV_GPIO14 — PAD T64
WOL_EN/GPIO9 C20 — RSV_WOL_EN — PAD T114
R325 8.2K — +3.3V_SUS

MISC
- 40 SPKR → SPKR M7
- 6 MCH_ICH_SYNC# → MCH_ICH_SYNC# AJ24
- 11 ICH_RSVD → B21
- T57 PAD → TP9 AH20
- T60 PAD → TP10 AJ20
- T58 PAD → TP11 AJ21
- TP3, TP9, TP10, TP11

Non-iAMT

ICH_PWRGD R530 10K
DPRSLPVR R356 100K
ICH_RSMRST# R517 10K
RSV_ICH_LAN_RST# R526 10K
ICH_CL_PWROK R547 1M

+3.3V_SUS
RSV_GPIO10 R532 10K

R525 10K PLTRST_DELAY#

+3.3V_RUN
R522 *2.2K_NC IMVP_PWRGD
R527 100K USB_MCARD2_DET#
R294 100K USB_MCARD3_DET#
R355 100K PCIE_MCARD1_DET#
R551 100K PCIE_MCARD2_DET#
R292 100K PCIE_MCARD3_DET#

+3.3V_RUN
R286 *10K_NC MCH_ICH_SYNC#
R545 10K IRQ_SERIRQ
R289 10K THERM_ALERT#

+3.3V_SUS
R523 10K RSV_WOL_EN
R305 10K SIO_EXT_SMI#
R317 100K USB_MCARD1_DET#

+3.3V_RUN
R544 *1K_NC SPKR

No Reboot strap.	
SPKR	Low = Default. High = No Reboot.

SMbus address D2

These are for backdrive issue.

Non-iAMT

+3.3V_RUN — RP42 2.2KX2
30,33,34 ICH_SMBDATA — Q40 2N7002W-7-F — MEM_SDATA 15
+3.3V_RUN — Q41 2N7002W-7-F
30,33,34 ICH_SMBCLK — MEM_SCLK 15

DIS:ALW
UMA:SUS

Non-iAMT

+3.3V_RUN — R516 3.24K/F
+3.3V_ALW — R313 *3.24K/F_NC
+3.3V_SUS — R314 *3.24K/F_NC

CL_VREF0 — C729 0.1U — R515 453/F — 10
CL_VREF1 — C421 *0.1U_NC — R310 *453/F_NC — 10

CL_VREF0/1 ~=0.405V

QUANTA COMPUTER

Title	ICH9-M (PM,GPIO,SMB,CL)	
Size	Document Number FM8	Rev 2A
Date: Friday, November 21, 2008	Sheet 13 of 58	

WWW.AliSaler.Com

WWW.AliSaler.Com

U22E

VSS[001] … VSS[198], VSS_NCTF[01] … VSS_NCTF[12]

ICH9M REV 1.0

U22F

VCCRTC
V5REF
V5REF_SUS
VCC1_5_B[01] … VCC1_5_B[49]
CORE
VCCDMIPLL
VCC_DMI[1]
VCC_DMI[2]
VCA2A3P
V_CPU_IO[1]
V_CPU_IO[2]
VCC3_3[01] … VCC3_3[14]
VCCP_CORE
PCI
VCCHDA
VCCSUSHDA
VCCSUS1_05[1]
VCCSUS1_05[2]
VCCSUS1_5[1]
VCCSUS1_5[2]
ARX
VCCSUS3_3[01] … VCCSUS3_3[05]
VCCSUS 3_3
VCCSUS3_3[06] … VCCSUS3_3[20]
VCCPUSB
USB CORE
VCCCL1_05
VCCCL1_5
VCCCL3_3[1]
VCCCL3_3[2]
VCCLAN1_05[1]
VCCLAN1_05[2]
VCCLAN3_3[1]
VCCLAN3_3[2]
VCCGLANPLL
VCCGLAN1_5[1] … VCCGLAN1_5[4]
VCCGLAN3_3
GLAN POWER
VCCSATAPLL
VCC1_5_A[01] … VCC1_5_A[30]
VCCUSBPLL

ICH9M REV 1.0

+RTC_CELL
C415 1U 10
C414 0.1U 10
C413 0.1U 10
+5V_RUN
+3.3V_RUN
R333 10
D17 SDMK0340L-7-F
+ICH_V5REF_RUN 603
2mA
C434 0.1U 10

Non-iAMT

+5V_SUS
+3.3V_SUS
R344 10
D19 SDMK0340L-7-F
+ICH_V5REF_SUS
2mA
C446 0.1U 10

+1.5V_RUN
L79 BLM21PG331SN1D 805
FB_330ohm+-25%_100mHz_ 1.5A_0.09 ohm DC
646mA
+1.5V_PCIE_ICH
C408 220uF 2.5 7343
C394 22U 10 1206
C396 22U 10 1206
C731 2.2U 10 805

+1.5V_RUN
R328 0
+VCCSATPLL_L
L50 10uH 805
10uH+-20%_100mA
+VCCSATPLL
47mA
C423 1U 10 603
C424 10U 6.3 603

+VCCSATPLL
+1.5V_RUN
C752 1U 10 603
C747 1U 10 603
VCC1_5_A TOTAL 1.342A

+1.5V_RUN
11mA
C780 0.1U 10
+1.5V_RUN
C769 0.1U 10

Non-iAMT

T66 PAD TP_VCCSUSLAN1
T65 PAD TP_VCCSUSLAN2
+3.3V_RUN
19mA
C763 0.1U 10
ICH_GLANPLL
23mA
+1.5V_PCIE_ICH
C726 4.7U 6.3 603
80mA
+3.3V_RUN
1mA

+1.05V_VCCP
C743 0.1U 10
C761 0.1U 10

+1.05V_VCCP
D15 BAT54C T/R
+1.5V_RUN
R290 10 805

1uH+-20%_800mA
+1.5V_DMIPLL
L41 1uH
+1.5V_DMIPLL_R
R268
+1.5V_RUN
C400 0.01U 25
C399 10U 6.3 603

23mA
+VCC_DMI_ICH
L80 BLM21PG331SN1D 805
+1.05V_VCCP
C737 4.7U 603 6.3
48mA
2mA

+1.05V_VCCP
C732 0.1U 10
C754 0.1U 10
C742 4.7U 603 6.3
VCC3_3 308mA
+3.3V_RUN
C793 0.1U 10
C724 0.1U 10
C779 0.1U 10
C774 0.1U 10
C734 0.1U 10
C770 0.1U 10
11mA
+3.3V_RUN
R510 0
+VCC_HDA
+VCCSUSHDA
C791 0.1U 10
TP_VCCSUS1.05_1 PAD T140
TP_VCCSUS1.05_2 PAD T119
TP_VCCSUS1.5_1 PAD T138
TP_VCCSUS1.5_2
C744 0.1U 10
+1.5V_RUN
R528 *0_NC

WWN Noise - ICH improvements
+3.3V_RUN
C728 *0.1U_NC
C767 *0.1U_NC
C778 *0.1U_NC
C730 *0.1U_NC

+3.3V_SUS
R568 0
+VCCSUSHDA
11mA
C782 0.1U 10
+1.5V_SUS
R569 *0_NC
+VCCSUSHDA
11mA
C799 *0.1U_NC 10

+3.3V_SUS
C773 0.22U 10V
C772 0.22U 10V
C751 0.1U 10
VCCSUS 3_3 212mA

WWN Noise - ICH improvements
C764 *0.1U_NC
C790 *0.1U_NC
C438 *0.1U_NC
C753 *0.1U_NC
C781 0.1U 10

RESERVE 1.5V_SUS FOR VCCSUSHDA
+3.3V_SUS
U27
VIN VOUT SHDN GND SET
*IC(5P) RT9193-15PB(SOT-23)_NC
C454 *1U/6.3V_NC
R1 R347 *22.1K/F_NC
C457 *4.7U/6.3V_NC
R2 R346 *100K/F_NC
+1.5V_SUS

+3.3V_RUN
Non-iAMT
C736 *0.1U_NC
C735 *1U_NC
C738 0.1U 10
19mA

+1.5V_RUN
L42 1uH/300mA_8
ICH_GLANPLL
C395 10U 805 10
C401 2.2U 603 6.3

QUANTA COMPUTER

Title: ICH9-M (POWER,GND)
Size: Document Number: FM8 Rev: 2A
Date: Friday, November 21, 2008 Sheet 14 of 58

WWW.AliSaler.Com

WWW.AliSaler.Com

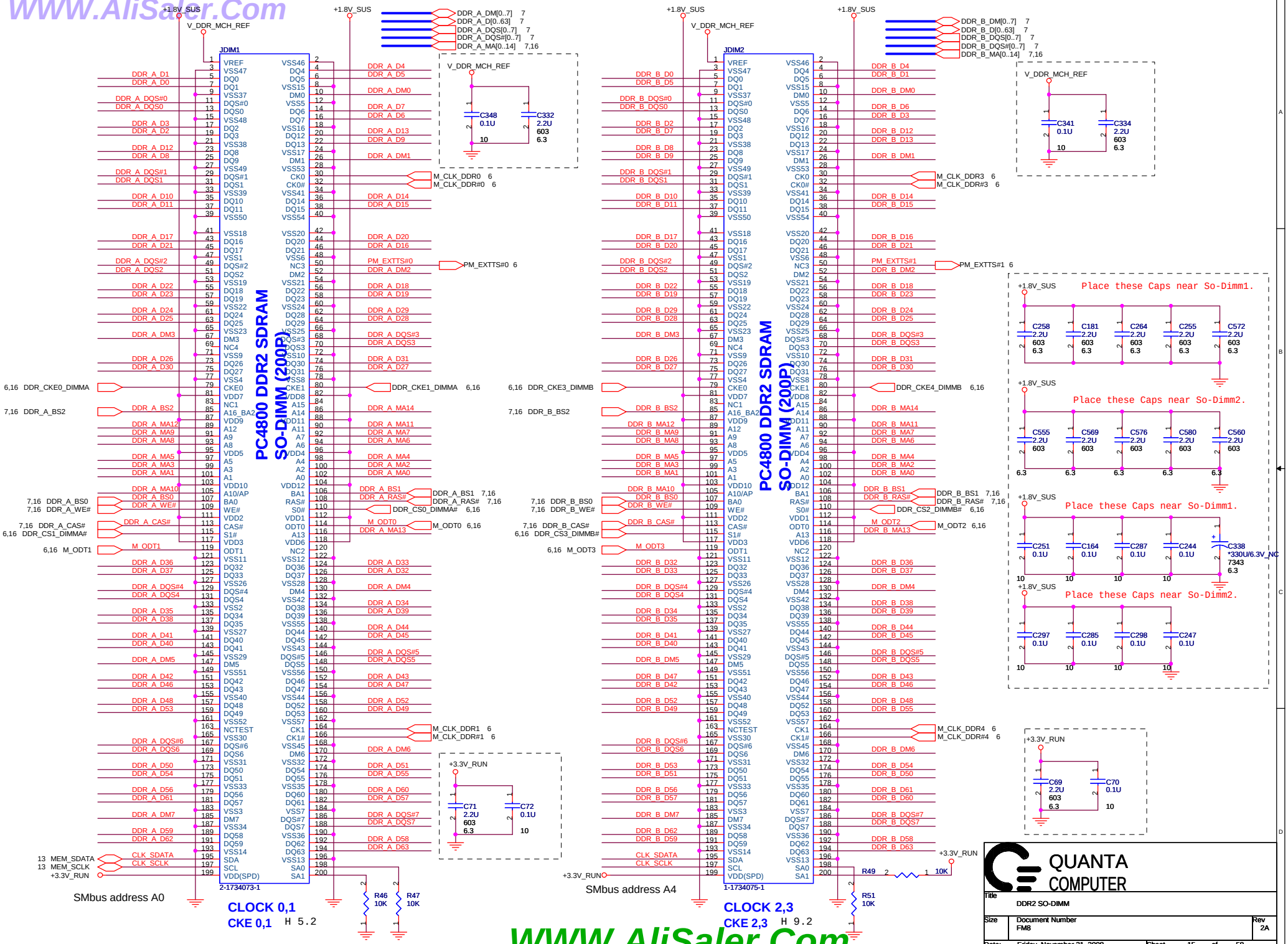

QUANTA COMPUTER

Title	DDR2 SO-DIMM	
Size	Document Number FM8	Rev 2A
Date: Friday, November 21, 2008	Sheet 15 of 58	

WWW.AliSaler.Com

WWW.AliSaler.Com

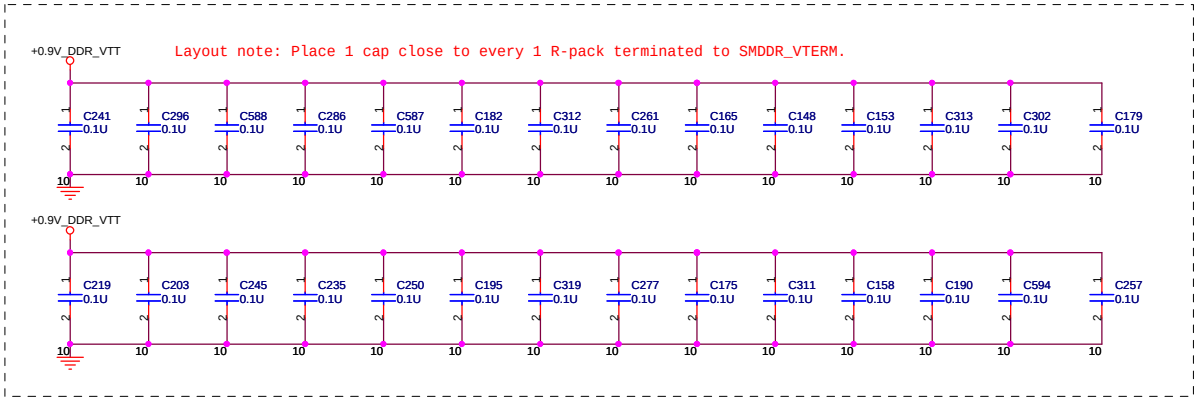

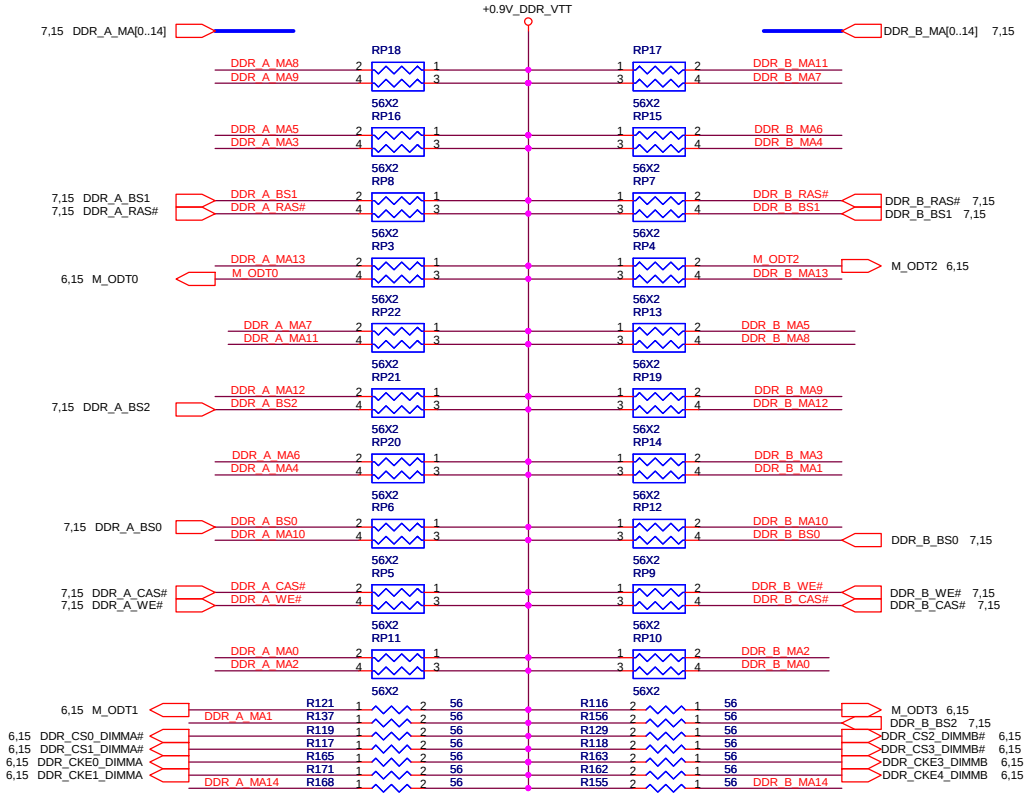

Layout notice:
Please these resistor
closely DIMMA,all
trace length<750 mil.

Layout notice:
Please these resistor
closely DIMMB,all
trace length<750 mil.

QUANTA COMPUTER

Title	DDR2 RES. ARRAY	
Size	Document Number FM8	Rev 2A
Date: Friday, November 21, 2008	Sheet 16 of 58	

WWW.AliSaler.Com

WWW.AliSaler.Com

Add capacitor pads for improving WWAN.

C402 20P 50 CLK_ICH_48M
C392 *27P_NC 50 CLK_ICH_14M
C389 *27P_NC 50 CLK_PCI_8512
C709 *27P_NC 50 CLK_PCI_PCCARD
C398 *27P_NC 50 CLK_PCI_ICH

Y2
CLK_XTAL_IN — 14.318MHZ — CLK_XTAL_OUT
C405 33P 50
C406 33P 50
14.318MHz

U21
CK505
QFN64
SLG8SP513V

+CK_VDD_PCI 9 VDD_PCI
4 VDD_REF
+CK_VDD_PLL3 23 VDD_PLL3
+CK_VDD_48 16 VDD_48
+CK_VDD_SRC 46 VDD_SRC
62 VDD_CPU
+CK_VDD_MAIN 19 VDD_IO
27 VDD_IO
33 VDD_IO
43 VDD_IO
52 VDD_IO
56 VDD_IO
15 GND
18 GND
22 GND
26 GND
30 GND
36 GND
49 GND
59 GND
1 GND

13 SATA_CLKREQ# — SATA_CLKREQ# R261 475/F
6 CLK_3GPLLREQ# — CLK_3GPLLREQ# R260 475/F
SATA_CLKREQ#_C 8 CR#_A/PCI-0
CLK_3GPLLREQ#_C 10 CR_B/PCI-1
PCI_PCCARD 11 TME/PCI-2
PCI_SIO 12 SRC5_EN/PCI-3
27M_SEL 13 27M_SEL/PCI-4
PCI_ICH 14 ITP_EN/PCIF-5#

33 CLK_LPC_DEBUG — CLK_LPC_DEBUG R508 22
28 CLK_PCI_PCCARD — CLK_PCI_PCCARD R507 33
31 CLK_PCI_8512 — CLK_PCI_8512 R257 33
12 CLK_PCI_ICH — CLK_PCI_ICH R258 33
13 CLK_ICH_48M — CLK_ICH_48M R269 33
3,6 CPU_MCH_BSEL0 — L44 BLM18AG601SN1D — R274 2.2K — FSA 17 FSA/USB48
3,6 CPU_MCH_BSEL1 — BLM18AG601SN1D — R272 0 — FSB 64 FSB/TEST_MODE
3,6 CPU_MCH_BSEL2 — L39 BLM18AG601SN1D — R263 10K — FSC 5 FSC/TEST_SEL/REF
13 CLK_ICH_14M — CLK_ICH_14M R262 33
13 CLK_PWRGD — 55 RESET# / 63 CK_PWRGD/PD#

CLK_XTAL_OUT 2 XOUT
CLK_XTAL_IN 3 XIN
CLK_SDATA 6 SDATA
CLK_SCLK 7 SCLK

CPU-0 61 — CLK_CPU_BCLK 3
CPU-0# 60 — CLK_CPU_BCLK# 3
CPU-1 58 — CLK_MCH_BCLK 5
CPU-1# 57 — CLK_MCH_BCLK# 5
SRC-8/CPU_ITP 54 — CLK_PCIE_MINI1 34
SRC-8#/CPU_ITP# 53 — CLK_PCIE_MINI1# 34
SRC-0/DOT96 20 — CLK_PCIE_VGA 18
SRC-0#/DOT96# 21 — CLK_PCIE_VGA# 18
SRC-1/SE1 24 — 27M_NSS — R280 33 — CLK_VGA_27M_NSS 19
SRC-1#/SE2 25 — 27M_SS — R281 *33_NC — CLK_VGA_27M_SS 19
SRC-2/SATA 28 — CLK_PCIE_SATA 11
SRC-2#/SATA# 29 — CLK_PCIE_SATA# 11
CR#_C/SRC-3 31 — CLK_PCIE_MINI3 33
CR#_D/SRC-3# 32 — CLK_PCIE_MINI3# 33
SRC-4 34 — CLK_MCH_3GPLL 6
SRC-4# 35 — CLK_MCH_3GPLL# 6
PCI_STOP#/SRC-5 45 — H_STP_PCI# 13
CPU_STOP#/SRC5-5# 44 — H_STP_CPU# 13
SRC-6 48 — CLK_PCIE_EXPCARD 30
SRC-6# 47 — CLK_PCIE_EXPCARD# 30
CR#_F/SRC-7 51 — MINI1CLK_REQ# — R298 475/F — MINI1CLK_REQ# — MINI1CLK_REQ# 34
CR#_E/SRC-7# 50 — CARD_CLK_REQ#_C — R297 475/F — CARD_CLK_REQ# — CARD_CLK_REQ# 30
SRC-9 37 — CLK_PCIE_MINI2 33
SRC-9# 38 — CLK_PCIE_MINI2# 33
SRC-10 41 — CLK_PCIE_ICH 12
SRC-10# 42 — CLK_PCIE_ICH# 12
CR#_H/SRC-11 40 — CLK_PCIE_LOM 42
CR#_G/SRC-11# 39 — CLK_PCIE_LOM# 42
GND 65

+3.3V_RUN
H_STP_PCI# R312 10K
H_STP_CPU# R311 10K

+3.3V_RUN
CLK_3GPLLREQ# R251 10K
SATA_CLKREQ# R252 10K
CARD_CLK_REQ# R300 10K
MINI1CLK_REQ# R301 10K
PCI_PCCARD R505 *10K_NC

PCI_SIO R266 *10K_NC

UMA without iAMT

+3.3V_RUN
L48 BLM21PG600SN1D 805 120 ohms@100Mhz
+CK_VDD_MAIN
C407 0.1U 10
C727 0.1U 10
C418 0.1U 10
C733 0.1U 10
C417 0.1U 10
C409 0.1U 10
C420 *10U_NC 603 6.3

L47 BLM21PG600SN1D 805 120 ohms@100Mhz
R271 2.2 +CK_VDD_PCI
C720 0.1U 10
C719 0.1U 10
R512 2.2 +CK_VDD_PLL3
C725 0.1U 10
R270 2.2 +CK_VDD_48
C403 0.1U 10
C404 4.7U 603 6.3
R529 2.2 +CK_VDD_SRC
C740 0.1U 10
C739 0.1U 10

Non-iAMT

SMbus address D2

These are for backdrive issue.

+3.3V_RUN
RP39 2.2KX2
Q65 2N7002W-7-F
31,39 SMBDAT1 — CLK_SDATA
+3.3V_RUN
Q64 2N7002W-7-F
31,39 SMBCLK1 — CLK_SCLK

+3.3V_RUN
R506 *10K_NC
PCI_ICH
R503 *10K_NC

R506 POP: For Internal pull-low.
R503 POP: For internal pull-high.

FSC	FSB	FSA	CPU	SRC	PCI
1	0	1	100	100	33
0	0	1	133	100	33
0	1	1	166	100	33
0	1	0	200	100	33
0	0	0	266	100	33
1	0	0	333	100	33
1	1	0	400	100	33
1	1	1	RSVD	100	33

+3.3V_RUN
R253 10K
27M_SEL
R256 *10K_NC

27M_SEL

27M_SEL (PIN13)	PIN20	PIN21	PIN24	PIN25
0=UMA	DOT96T	DOT96C	96/ 100M_T	96/ 100M_C
1 = Disc. GRFX down	SRCT0	SRCC0	27Mout	27MSSout

QUANTA COMPUTER

Title: CLOCK GENERATOR
Size: Document Number FM8 Rev 2A
Date: Friday, November 21, 2008 Sheet 17 of 58

WWW.AliSaler.Com

WWW.AliSaler.Com

6 PCIE_MTX_GRX_P[0..15]
6 PCIE_MTX_GRX_N[0..15]

U32A
PART 1 OF 10

PCI-EXPRESS INTERFACE

PCIE_MTX_GRX_P0	AF30	PCIE_RX0P	PCIE_TX0P	AH30	PCIE_MRX_GTX_C_P0
PCIE_MTX_GRX_N0	AE31	PCIE_RX0N	PCIE_TX0N	AG31	PCIE_MRX_GTX_C_N0
PCIE_MTX_GRX_P1	AE29	PCIE_RX1P	PCIE_TX1P	AG29	PCIE_MRX_GTX_C_P1
PCIE_MTX_GRX_N1	AD28	PCIE_RX1N	PCIE_TX1N	AF28	PCIE_MRX_GTX_C_N1
PCIE_MTX_GRX_P2	AD30	PCIE_RX2P	PCIE_TX2P	AF27	PCIE_MRX_GTX_C_P2
PCIE_MTX_GRX_N2	AC31	PCIE_RX2N	PCIE_TX2N	AF26	PCIE_MRX_GTX_C_N2
PCIE_MTX_GRX_P3	AC29	PCIE_RX3P	PCIE_TX3P	AD27	PCIE_MRX_GTX_C_P3
PCIE_MTX_GRX_N3	AB28	PCIE_RX3N	PCIE_TX3N	AD26	PCIE_MRX_GTX_C_N3
PCIE_MTX_GRX_P4	AB30	PCIE_RX4P	PCIE_TX4P	AC25	PCIE_MRX_GTX_C_P4
PCIE_MTX_GRX_N4	AA31	PCIE_RX4N	PCIE_TX4N	AB25	PCIE_MRX_GTX_C_N4
PCIE_MTX_GRX_P5	AA29	PCIE_RX5P	PCIE_TX5P	Y23	PCIE_MRX_GTX_C_P5
PCIE_MTX_GRX_N5	Y28	PCIE_RX5N	PCIE_TX5N	Y24	PCIE_MRX_GTX_C_N5
PCIE_MTX_GRX_P6	Y30	PCIE_RX6P	PCIE_TX6P	AB27	PCIE_MRX_GTX_C_P6
PCIE_MTX_GRX_N6	W31	PCIE_RX6N	PCIE_TX6N	AB26	PCIE_MRX_GTX_C_N6
PCIE_MTX_GRX_P7	W29	PCIE_RX7P	PCIE_TX7P	Y27	PCIE_MRX_GTX_C_P7
PCIE_MTX_GRX_N7	V28	PCIE_RX7N	PCIE_TX7N	Y26	PCIE_MRX_GTX_C_N7
PCIE_MTX_GRX_P8	V30	PCIE_RX8P	PCIE_TX8P	W24	PCIE_MRX_GTX_C_P8
PCIE_MTX_GRX_N8	U31	PCIE_RX8N	PCIE_TX8N	W23	PCIE_MRX_GTX_C_N8
PCIE_MTX_GRX_P9	U29	PCIE_RX9P	PCIE_TX9P	V27	PCIE_MRX_GTX_C_P9
PCIE_MTX_GRX_N9	T28	PCIE_RX9N	PCIE_TX9N	U26	PCIE_MRX_GTX_C_N9
PCIE_MTX_GRX_P10	T30	PCIE_RX10P	PCIE_TX10P	U24	PCIE_MRX_GTX_C_P10
PCIE_MTX_GRX_N10	R31	PCIE_RX10N	PCIE_TX10N	U23	PCIE_MRX_GTX_C_N10
PCIE_MTX_GRX_P11	R29	PCIE_RX11P	PCIE_TX11P	T26	PCIE_MRX_GTX_C_P11
PCIE_MTX_GRX_N11	P28	PCIE_RX11N	PCIE_TX11N	T27	PCIE_MRX_GTX_C_N11
PCIE_MTX_GRX_P12	P30	PCIE_RX12P	PCIE_TX12P	T24	PCIE_MRX_GTX_C_P12
PCIE_MTX_GRX_N12	N31	PCIE_RX12N	PCIE_TX12N	T23	PCIE_MRX_GTX_C_N12
PCIE_MTX_GRX_P13	N29	PCIE_RX13P	PCIE_TX13P	P27	PCIE_MRX_GTX_C_P13
PCIE_MTX_GRX_N13	M28	PCIE_RX13N	PCIE_TX13N	P26	PCIE_MRX_GTX_C_N13
PCIE_MTX_GRX_P14	M30	PCIE_RX14P	PCIE_TX14P	P24	PCIE_MRX_GTX_C_P14
PCIE_MTX_GRX_N14	L31	PCIE_RX14N	PCIE_TX14N	P23	PCIE_MRX_GTX_C_N14
PCIE_MTX_GRX_P15	L29	PCIE_RX15P	PCIE_TX15P	M27	PCIE_MRX_GTX_C_P15
PCIE_MTX_GRX_N15	K30	PCIE_RX15N	PCIE_TX15N	N26	PCIE_MRX_GTX_C_N15

100 MHz (+/-300 ppm) input frequency, 0-0.7 V single-ended swing.
clock must be provided less than 400ns
after CLKREQ# is asserted

17 CLK_PCIE_VGA — AK30 PCIE_REFCLKP
17 CLK_PCIE_VGA# — AK32 PCIE_REFCLKN

13 PLTRST_DELAY# — R55 1 *0_NC 2 — AL27 PERSTB
6,12,30,31,33,34,42 PLTRST# — R56 1 0 2

PCIE_CALRN — AA22 — PCIE_CALRN — 2.0K — R591 — (1.1V) +PCIE_VDDC
PCIE_CALRP — Y22 — PCIE_CALRP — 1.27K — R592

M92-S2/M92-XT

6 PCIE_MRX_GTX_P[0..15]
6 PCIE_MRX_GTX_N[0..15]

PCIE_MRX_GTX_P0	0.1U	C814	10	PCIE_MRX_GTX_C_P0	PCIE_MRX_GTX_N0	0.1U	C830	10	PCIE_MRX_GTX_C_N0
PCIE_MRX_GTX_P1	0.1U	C815	10	PCIE_MRX_GTX_C_P1	PCIE_MRX_GTX_N1	0.1U	C831	10	PCIE_MRX_GTX_C_N1
PCIE_MRX_GTX_P2	0.1U	C816	10	PCIE_MRX_GTX_C_P2	PCIE_MRX_GTX_N2	0.1U	C832	10	PCIE_MRX_GTX_C_N2
PCIE_MRX_GTX_P3	0.1U	C817	10	PCIE_MRX_GTX_C_P3	PCIE_MRX_GTX_N3	0.1U	C833	10	PCIE_MRX_GTX_C_N3
PCIE_MRX_GTX_P4	0.1U	C818	10	PCIE_MRX_GTX_C_P4	PCIE_MRX_GTX_N4	0.1U	C834	10	PCIE_MRX_GTX_C_N4
PCIE_MRX_GTX_P5	0.1U	C819	10	PCIE_MRX_GTX_C_P5	PCIE_MRX_GTX_N5	0.1U	C835	10	PCIE_MRX_GTX_C_N5
PCIE_MRX_GTX_P6	0.1U	C820	10	PCIE_MRX_GTX_C_P6	PCIE_MRX_GTX_N6	0.1U	C836	10	PCIE_MRX_GTX_C_N6
PCIE_MRX_GTX_P7	0.1U	C821	10	PCIE_MRX_GTX_C_P7	PCIE_MRX_GTX_N7	0.1U	C837	10	PCIE_MRX_GTX_C_N7
PCIE_MRX_GTX_P8	0.1U	C822	10	PCIE_MRX_GTX_C_P8	PCIE_MRX_GTX_N8	0.1U	C838	10	PCIE_MRX_GTX_C_N8
PCIE_MRX_GTX_P9	0.1U	C823	10	PCIE_MRX_GTX_C_P9	PCIE_MRX_GTX_N9	0.1U	C839	10	PCIE_MRX_GTX_C_N9
PCIE_MRX_GTX_P10	0.1U	C824	10	PCIE_MRX_GTX_C_P10	PCIE_MRX_GTX_N10	0.1U	C840	10	PCIE_MRX_GTX_C_N10
PCIE_MRX_GTX_P11	0.1U	C825	10	PCIE_MRX_GTX_C_P11	PCIE_MRX_GTX_N11	0.1U	C841	10	PCIE_MRX_GTX_C_N11
PCIE_MRX_GTX_P12	0.1U	C826	10	PCIE_MRX_GTX_C_P12	PCIE_MRX_GTX_N12	0.1U	C842	10	PCIE_MRX_GTX_C_N12
PCIE_MRX_GTX_P13	0.1U	C827	10	PCIE_MRX_GTX_C_P13	PCIE_MRX_GTX_N13	0.1U	C843	10	PCIE_MRX_GTX_C_N13
PCIE_MRX_GTX_P14	0.1U	C828	10	PCIE_MRX_GTX_C_P14	PCIE_MRX_GTX_N14	0.1U	C844	10	PCIE_MRX_GTX_C_N14
PCIE_MRX_GTX_P15	0.1U	C829	10	PCIE_MRX_GTX_C_P15	PCIE_MRX_GTX_N15	0.1U	C845	10	PCIE_MRX_GTX_C_N15

M92-S2 XT AJ072800T04 100-CG1675(216-0728004)
M92-S2 AJ072800T03 100-CG1643(216-0728003)

QUANTA COMPUTER

Title	VGA-M92-XT (PCIe)	
Size	Document Number FM8	Rev 2A
Date: Friday, November 21, 2008	Sheet 18 of 58	

WWW.AliSaler.Com

WWW.AliSaler.Com

MEMORY APERTURE SIZE SELECT

MEMORY SIZE	CFG3 GPIO9	CFG2 GPIO13	CFG1 GPIO12	CFG0 GPIO11
128MB		0	0	0
256MB		0	0	1
64MB		0	1	0
512MB		1	0	0

8

+3.3V_DELAY
R595 2.10K RAM_CFG0
R597 2.*10K_NC RAM_CFG1
R599 2.*10K_NC RAM_CFG2

GPIO Straps table	DESCRIPTION OF DEFAULT SETTINGS	FM8 setting
GPIO0	GPIO(0) - TX_PWRS_ENB (Transmitter Power Savings Enable) 0: 50% Tx output swing for mobile mode 1: full Tx output swing (Default setting for Desktop)	0
GPIO1	GPIO(1) - TX_DEEMPH_EN (Transmitter De-emphasis Enable) 0: Tx de-emphasis disabled for mobile mode 1: Tx de-emphasis enabled (Default setting for Desktop)	0
GPIO2	GPIO(2) - BIF_GEN2_EN (5.0 GT/s Enable) 0 : Default. (Driver Controlled Gen2) 1 : Strap Controlled Gen2	0
GPIO3	ATI reserved configuration straps.	0
GPIO4	ATI reserved configuration straps.	0
GPIO5	GPIO_5_AC_BATT 0 : Battery saving mode = 0.0 V 1 : AC (Performance mode) = 3.3 V	0
GPIO6	ATI Internal use only	0

+3.3V_DELAY
R603 1 2 *10K_NC GPIO0
R604 1 2 *10K_NC GPIO1
R605 1 2 *10K_NC GPIO2
R606 1 2 *10K_NC GPIO3
R607 1 2 *10K_NC GPIO4
R608 1 2 *10K_NC GPIO5
R611 1 2 10K HDMI_HD_EN
R613 1 2 *10K_NC TEMP_FAIL
R614 1 2 10K GFX_CLKREQ#
R615 1 2 10K VGAVSYNC
R620 1 2 10K VGAHSYNC
R628 1 2 *10K_NC VGAVSYNC
R627 1 2 *10K_NC VGAHSYNC
R624 1 2 10K TEMP_FAIL

19 48

+1.8V_RUN
R596 1 2 10K RAM_TYPE_CFG0
R598 1 2 10K RAM_TYPE_CFG1
R600 1 2 *10K_NC RAM_TYPE_CFG2
R601 1 2 *10K_NC RAM_TYPE_CFG3

38

Memory Straps	RAM_TYPE_CFG3	RAM_TYPE_CFG2	RAM_TYPE_CFG1	RAM_TYPE_CFG0	Quanta PN (QuantaBuy)	Quanta PN (WinBuy)	Vendor PN	31 level PN
800MHz 512MB(32M*32) Samsung	0	0	1	0	AKD5LWGT501	AKD5LWGT504	K4J10324QD-HC12	31FM8MB0030
900MHz 512MB(32M*32) Qimonda	0	0	1	1	AKD5LWFT^03	AKD5LWFT^00	HYB18H1G321AF-11	31FM8MB0000
800MHz 256MB(16M*32) Samsung	0	0	0	1	AKD5FWGT500	AKD5FWGT503	K4J52324QH-HC12	31FM8MB0040
900MHz 256MB(16M*32) Hynix	0	0	0	0	AKD5FWHTW03	AKD5FWHTW06	H5RS5223CFR-11C	31FM8MB0020

26,44,48,49,53 RUN_ON
21,31 GFX_ON
R654 *0_NC
R656 0
C868 *0.1U_NC 25 603
GFX_RUN_ON 50

31 51

Q69 SI2303BDS-T1-E3
+3.3V_DELAY
+3.3V_RUN
R649 100K
R651 75K/F
C867 0.1U 10
Q72 2N7002W-7-F
OPTIONAL RC NETWORK TO FINE TUNE POWER SEQUENCING

As M82 design, for GPIO use

OSC_SPREAD
17 CLK_VGA_27M_SS
17 CLK_VGA_27M_NSS
R631 *0_reserve
R633 *0_reserve
CLK_VGA_27M_SSIN_R
R636 *10K_reserve
R635 0
R634 100/F
R637 120/F
OSC_OUT
R643 *182R_reserve
R644 *1M_reserve
R640 *0_reserve
Y4 *27MHZ_reserve
R642 1M_reserve
C860 *12P_reserve 50
C861 *12P_reserve 50
XTALIN 23
XTALOUT 23
R638 *221/F_reserve

Spread Spectrum
If U4, the discrete spread spectrum chip is not used, then pop R48 in order to pull-down BXTALOUT for EMI reasons.

+3.3V_RUN
R659 *10K_reserve
R660 *10K_reserve
R664 *10K_reserve
OSC_OUT
R669 *0_reserve
OSC_SPREAD
U45
XIN/CLKIN XOUT
VSS VDD
SO PD#
SSCLK REFCLK
*P1819GF-08SR_reserve
+3VL
L81 *BLM11A05S_reserve
C955 *10U_reserve 805 10
C956 *0.1U_reserve 10

	S0
-1.75% (DOWN)	0

U32B PART 2 OF 10

DVP PORT
DVPCLK U1
DVPCNTL_0 AC7
DVPCNTL_1 Y2
DVPCNTL_2 U5
DVPCNTL_MVP_0 AA1
DVPCNTL_MVP_1 Y4
DVPDATA_0 Y7
DVPDATA_1 V2
DVPDATA_2 Y8
DVPDATA_3 V4
DVPDATA_4 AB7
DVPDATA_5 W1
DVPDATA_6 AB8
DVPDATA_7 W3
DVPDATA_8 AB9
DVPDATA_9 W5
DVPDATA_10 AC6
DVPDATA_11 W6
DVPDATA_12 AD7
DVPDATA_13 AA3
DVPDATA_14 AC8
DVPDATA_15 AA5
DVPDATA_16 AE8
DVPDATA_17 AA6
DVPDATA_18 AE9
DVPDATA_19 AB4
DVPDATA_20 AD9
DVPDATA_21 AB2
DVPDATA_22 AC10
DVPDATA_23 AC5

RAM_TYPE_CFG0
RAM_TYPE_CFG1
RAM_TYPE_CFG2
RAM_TYPE_CFG3

I/O
GPIO_0 GPIO0 U6
GPIO_1 GPIO1 U10
GPIO_2 GPIO2 T10
GPIO_3_SMBDATA GPIO3 U8
GPIO_4_SMBCLK GPIO4 U7
GPIO_5_AC_BATT GPIO5 T9
GPIO_6_TACH T8
GPIO_7_BLON T7
GPIO_8_ROMSO P10
GPIO_9_ROMSI T158 PAD P4
GPIO_10_ROMSCK T159 PAD P2
GPIO_11 RAM_CFG3 N6
GPIO_12 RAM_CFG1 N5
GPIO_13 RAM_CFG2 N3
GPIO_14_HPD2 T86 PAD Y9
GPIO_15_PWRCNTL_0 N1
GPIO_16_SSIN CLK_VGA_27M_SSIN_R M4
GPIO_17_THERMAL_INT THERMAL_INT# R6
GPIO_18_HPD3 TEMP_FAIL T23 PAD W10
GPIO_19_CTF M2
GPIO_20_PWRCNTL_1 P8
GPIO_21_BB_EN BB_ENA P7
GPIO_22_ROMCSB T89 PAD N8
GPIO_23_CLKREQB GFX_CLKREQ# N7
JTAG_TRSTB L6
JTAG_TDI T13 PAD L5
JTAG_TCK T28 PAD L3
JTAG_TMS T24 PAD L1
JTAG_TDO T25 PAD K4

GFX_CORE_CNTRL2 R619 0 PANEL_BKEN
GFX_CORE_CNTRL0 R618 0
GFX_CORE_CNTRL1 R622 0
R141 *0_NC
R449 1K

35 48 52

GENERICA T21 PAD AB13
GENERICB T20 PAD W8
GENERICC T30 PAD W9
GENERICD T10 PAD W7
GENERICE_HPD4 T12 PAD AD10
HPD1 AC14
VREFG AC16
R639 499/F
R641 249/F
C859 0.1U

RESERVED
NC_PWRGOOD T29 PAD N10
RSVD#8 T27 PAD AB22
RSVD#9 T26 PAD AC22
NC#1 T77 PAD L9
NC#2 T49 PAD N9
RSVD#3 T161 PAD AB16
RSVD#2 AB12
RSVD#1 AB11
ENVDD
BIA_PWM
R645 0
R621 10K
R57 1K
TESTEN AE24

M92-S2/M92-XT

DAC1
R AM26 AK26 VGA_RED 27
G AL25 AJ25 VGA_GRN 27
B AH24 AG25 VGA_BLU 27
HSYNC AH26 VGAHSYNC 27
VSYNC AJ27 VGAVSYNC 27
AVDD AG24 +AVDD L82 BLM15BD121SN1D
C846 10nF C847 0.1U C848 1uF C849 4.7uF
AVSSQ AE22
VDD1DI AE23 +VDD1DI L83 BLM15BD121SN1D
C850 10nF C851 0.1U C852 1uF
VSS1DI AD23
Place very close to ASIC balls
RSET AD22 R612 499R

DAC2
R2 AM12 AK12
G2 AL11 AJ11
B2 AK10 AL9
H2SYNC AL13 AJ13
V2SYNC
C AH12
Y AM10
COMP AJ9
A2VDD AE20 C856 *0.1U_NC
A2VDDQ AE17 +A2VDDQ L85 BLM15BD121SN1D
C857 0.1U C858 1uF
A2VSSQ AE19
VDD2DI AD19 C863 *0.1U_NC
VSS2DI AC19
R2SET AG13 R2SET R646 715

VGA_BLU
VGA_GRN
VGA_RED
R413 150/F R414 150/F R415 150/F

DIS only
Layout Note:
Place 150 ohm termination resistors close to ATI CHIP.

+1.8V_RUN
+3.3V_DELAY
R616 10K R617 10K
HPD1
Q67 MMST3904-7-F
Q68 DTC114TUAT106
HDMI_DET 26
R625 100K

WWW.AliSaler.Com

QUANTA COMPUTER

Title	VGA-M92-XT (PCIe)	
Size	Document Number FM8	Rev 2A
Date: Friday, November 21, 2008	Sheet 19 of 58	

www.AliSaler.com

layout note: close to VDDR1#[1:17]

+1.8V_RUN

C869 10nF, C870 10nF, C871 10nF, C872 10nF, C873 10nF, C874 100nF, C875 100nF, C877 100nF, C878 100nF

C879 1uF_6.3V, C880 1uF_6.3V, C881 1uF_6.3V, C882 1uF_6.3V, C883 1uF_6.3V, C886 100nF

C895 10U, C896 10U, C897 10U

U32D

PART 4 OF 10

POWER

VDDR1#1 H13, VDDR1#2 H16, VDDR1#3 H19, VDDR1#4 J10, VDDR1#5 J23, VDDR1#6 J24, VDDR1#7 J9, VDDR1#8 K10, VDDR1#9 K23, VDDR1#10 K24, VDDR1#11 K9, VDDR1#12 L11, VDDR1#13 L12, VDDR1#14 L13, VDDR1#15 L20, VDDR1#16 L21, VDDR1#17 L22

PCIE_VDDR#1 AB23, PCIE_VDDR#2 AC23, PCIE_VDDR#3 AD24, PCIE_VDDR#4 AE24, PCIE_VDDR#5 AE25, PCIE_VDDR#6 AE26, PCIE_VDDR#7 AF25, PCIE_VDDR#8 AG26

C888 1uF_6.3V, C892 100nF, C889 1uF_6.3V, C893 10nF, C894 10U

L87 BLM15BD121SN1D

C909 10U, C910 100nF, C911 1uF_6.3V, C912 1uF_6.3V, C913 100nF

+VDD_CT

VDD_CT#1 AA20, VDD_CT#2 AA21, VDD_CT#3 AB20, VDD_CT#4 AB21

C899 1uF_6.3V, C900 1uF_6.3V, C901 1uF_6.3V, C902 1uF_6.3V, C903 1uF_6.3V, C904 1uF_6.3V, C906 1uF_6.3V, C907 10U

(1.1V) +PCIE_VDDC

PCIE_VDDC#1 L23, PCIE_VDDC#2 L24, PCIE_VDDC#3 L25, PCIE_VDDC#4 L26, PCIE_VDDC#5 M22, PCIE_VDDC#6 N22, PCIE_VDDC#7 N23, PCIE_VDDC#8 N24, PCIE_VDDC#9 P22, PCIE_VDDC#10 T22, PCIE_VDDC#11 U22, PCIE_VDDC#12 V22

+3.3V_DELAY

C914 1uF_6.3V, C915 1uF_6.3V, C916 100nF, C908 100nF

VDDR3#1 AA17, VDDR3#2 AA18, VDDR3#3 AB17, VDDR3#4 AB18

VDDR4#1 AA11, VDDR4#2 AA12, VDDR4#3 Y11, VDDR4#4 Y12

C919 1uF_6.3V, C920 100nF, C921 1uF_6.3V, C922 100nF

VDDR5#1 U11, VDDR5#2 U12, VDDR5#3 V11, VDDR5#4 V12

L88 BLM15BD121SN1D

+VDDRH1

VDDRHA L17

C923 1uF_6.3V, C924 1uF_6.3V

VSSRHA L16

(0.9~1.2V) +VCC_GFX_CORE

VDDC#1 AA15, VDDC#2 M11, VDDC#3 M12, VDDC#4 N15, VDDC#5 N17, VDDC#6 R13, VDDC#7 R16, VDDC#8 R18, VDDC#9 R21, VDDC#10 T12, VDDC#11 T15, VDDC#12 T17, VDDC#13 T20, VDDC#14 U13, VDDC#15 U16, VDDC#16 U18, VDDC#17 U21, VDDC#18 V15, VDDC#19 V17, VDDC#20 V20, VDDC#21 V21, VDDC#22 Y13, VDDC#23 Y16, VDDC#24 Y18, VDDC#25 Y21

+BBP

C917 100nF, C918 1uF_6.3V

+VDDCI (0.9~1.2V)

VDDCI#1 M13, VDDCI#2 M15, VDDCI#3 M16, VDDCI#4 M17, VDDCI#5 M18, VDDCI#6 M20, VDDCI#7 M21, VDDCI#8 N20

M92-S2/M92-XT

U32E

PART 5 OF 10

GND

PCIE_VSS#1 AA27, PCIE_VSS#2 AB24, PCIE_VSS#3 AB32, PCIE_VSS#4 AC24, PCIE_VSS#5 AC26, PCIE_VSS#6 AC27, PCIE_VSS#7 AD25, PCIE_VSS#8 AD32, PCIE_VSS#9 AE27, PCIE_VSS#10 AF32, PCIE_VSS#11 AG27, PCIE_VSS#12 AH32, PCIE_VSS#13 K28, PCIE_VSS#14 K32, PCIE_VSS#15 L27, PCIE_VSS#16 M32, PCIE_VSS#17 N25, PCIE_VSS#18 N27, PCIE_VSS#19 P25, PCIE_VSS#20 P32, PCIE_VSS#21 R27, PCIE_VSS#22 T25, PCIE_VSS#23 T32, PCIE_VSS#24 U25, PCIE_VSS#25 U27, PCIE_VSS#26 V32, PCIE_VSS#27 W25, PCIE_VSS#28 W26, PCIE_VSS#29 W27, PCIE_VSS#30 Y25, PCIE_VSS#31 Y32

GND#1 A3, GND#2 A30, GND#3 AA13, GND#4 AA16, GND#5 AB10, GND#6 AB15, GND#7 AB6, GND#8 AC9, GND#9 AD6, GND#10 AD8, GND#11 AE7, GND#12 AG12, GND#13 AH10, GND#14 AH28, GND#15 B10, GND#16 B12, GND#17 B14, GND#18 B16, GND#19 B18, GND#20 B20, GND#21 B22, GND#22 B24, GND#23 B26, GND#24 B6, GND#25 B8, GND#26 C1, GND#27 C32, GND#28 E28, GND#29 F10, GND#30 F12, GND#31 F14, GND#32 F16

GND#33 F18, GND#34 F2, GND#35 F20, GND#36 F22, GND#37 F24, GND#38 F26, GND#39 F6, GND#40 F8, GND#41 G10, GND#42 G27, GND#43 G31, GND#44 G8, GND#45 H14, GND#46 H17, GND#47 H2, GND#48 H20, GND#49 H6, GND#50 J27, GND#51 J31, GND#52 K11, GND#53 K2, GND#54 K22, GND#55 K6, GND#56 M6, GND#57 N11, GND#58 N12, GND#59 N13, GND#60 N16, GND#61 N18, GND#62 N21, GND#63 P6, GND#64 P9, GND#65 R12, GND#66 R15, GND#67 R17, GND#68 R20, GND#69 T13, GND#70 T16, GND#71 T18, GND#72 T21, GND#73 T6, GND#74 U15, GND#75 U17, GND#76 U20, GND#77 U3, GND#78 U9, GND#79 V13, GND#80 V16, GND#81 V18, GND#82 V8, GND#83 Y10, GND#84 Y15, GND#85 Y17, GND#86 Y20, GND#87 Y6, GND#88 T11, GND#89 R11

VSS_MECH#1 A32, VSS_MECH#2 AM1, VSS_MECH#3 AM32

M92-S2/M92-XT

+1.1V_GFX_PCIE

L12 BLM18PG121SN1D

(1.1V) +PCIE_VDDC (PCIE_VDDC 1.1V @ 1A)

C168 10U 603 6.3, C183 1U <Size> 10, C211 0.1U 10

C68 10U 603 6.3, C74 1U <Size> 10, C196 0.1U 10

+BBP

Q71 SI2303BDS-T1-E3

Q70 2N7002W-7-F

C866 1U <Size> 10

R652 100K

+5V_RUN

19 BB_ENA

Q74 2N7002W-7-F

R653 10K

layout note: close to VDDC#[1:25]

(0.9~1.2V) +VCC_GFX_CORE

C925 1uF_6.3V, C926 1uF_6.3V, C927 1uF_6.3V, C929 1uF_6.3V, C930 1uF_6.3V

C931 1uF_6.3V, C932 1uF_6.3V, C933 1uF_6.3V, C934 1uF_6.3V, C935 1uF_6.3V, C936 1uF_6.3V, C937 1uF_6.3V, C939 1uF_6.3V

C947 10U, C946 10U, C948 10U

C941 100nF, C942 100nF, C943 1uF_6.3V, C944 1uF_6.3V, C945 10U

L89 BLM18EG221SN1D

QUANTA COMPUTER

Title: VGA-M92-XT (PCIe)

Size: | Document Number: FM8 | Rev: 2A

Date: Friday, November 21, 2008 | Sheet 20 of 58

WWW.AliSaler.Com

WWW.AliSaler.Com

MEMORY INTERFACE

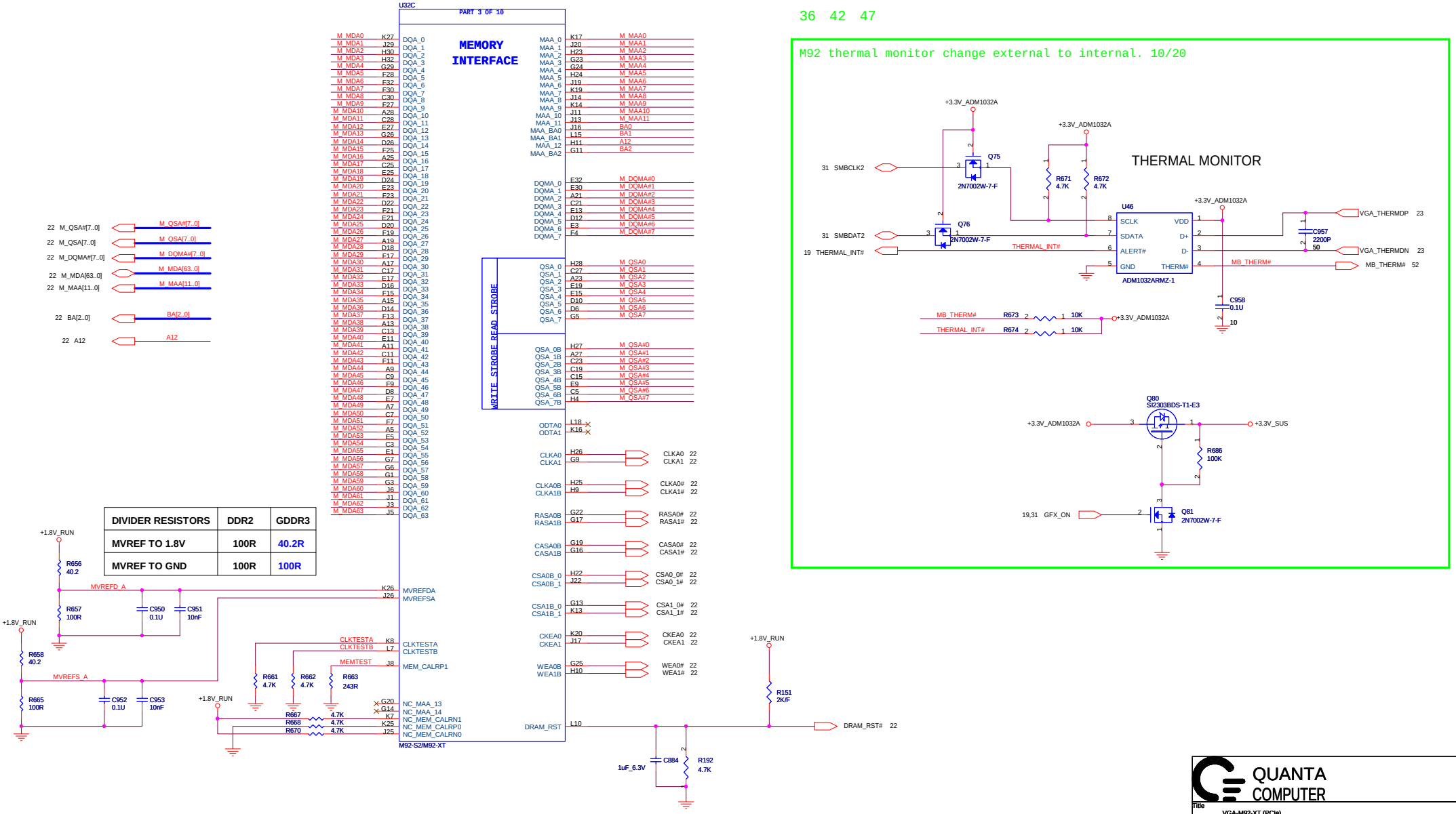

DIVIDER RESISTORS	DDR2	GDDR3
MVREF TO 1.8V	100R	40.2R
MVREF TO GND	100R	100R

WWW.AliSaler.Com

WWW.AliSaler.Com

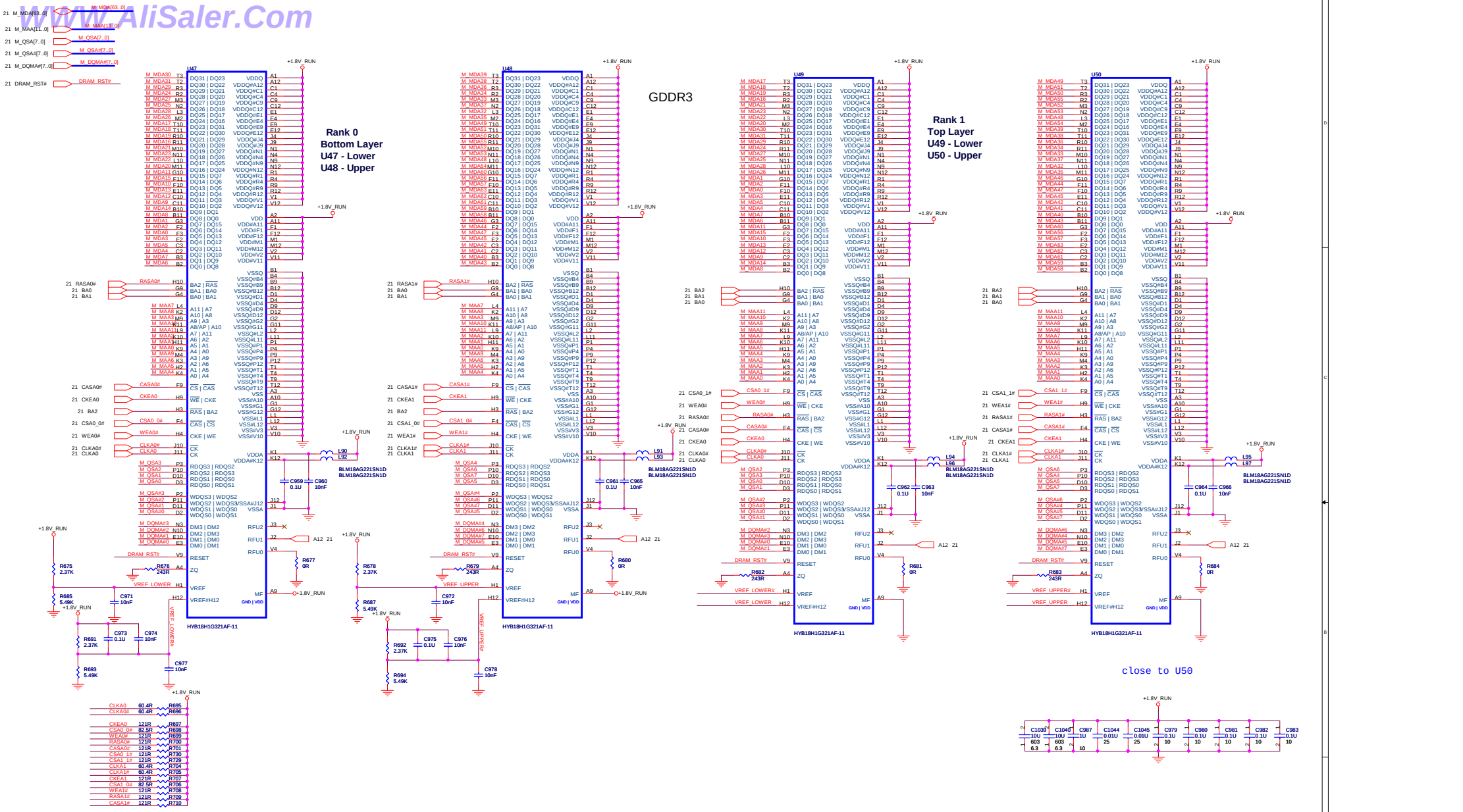

close to U47

close to U48

close to U49

Base on M82 GDDR Caps.

WWW.AliSaler.Com

Title	VGA-M82-S (VRAM)
Size	Document Number FM8
Rev	2A
Date:	Friday, November 21, 2008
Sheet	22 of 58

QUANTA COMPUTER

WWW.AliSaler.Com

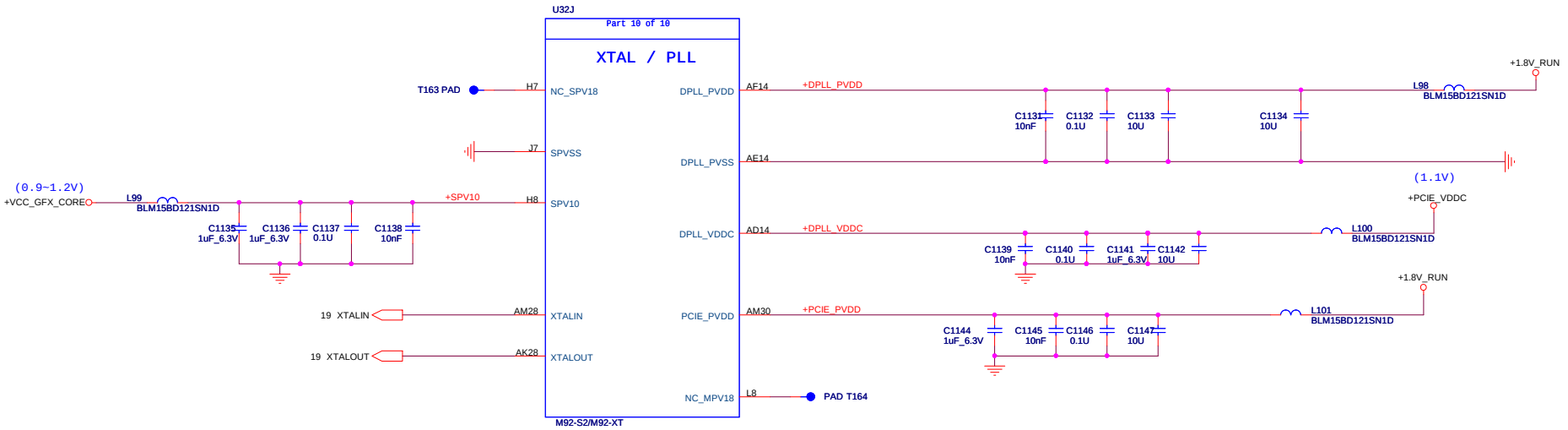

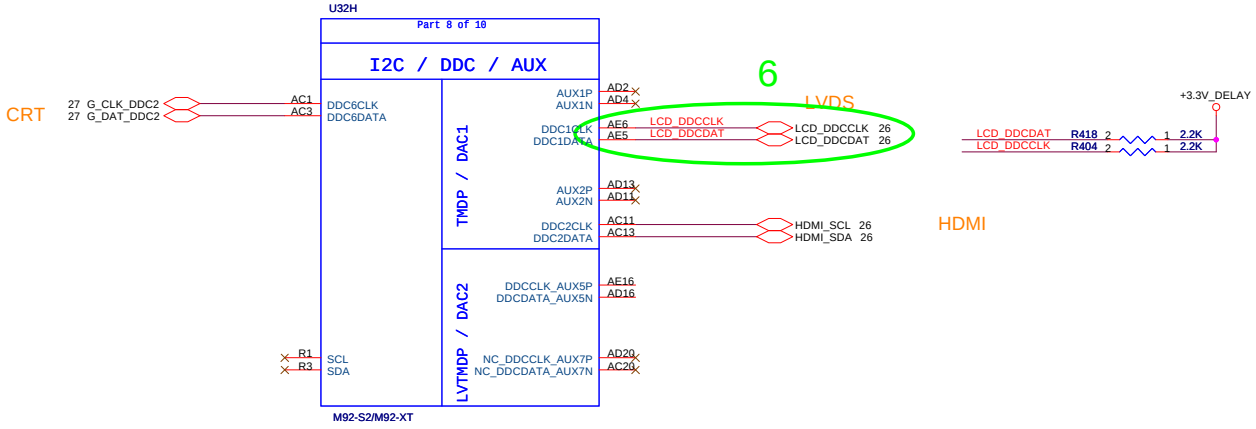

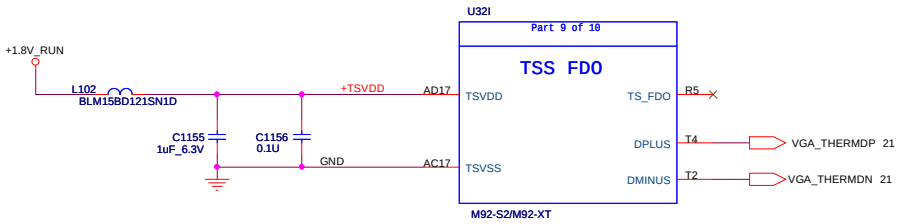

QUANTA COMPUTER

Title	VGA-M92-XT (PCIe)	
Size	Document Number FM8	Rev 2A
Date: Friday, November 21, 2008	Sheet 23 of 58	

WWW.AliSaler.Com

WWW.AliSaler.Com

TMDP(HDMI) INTERFACE

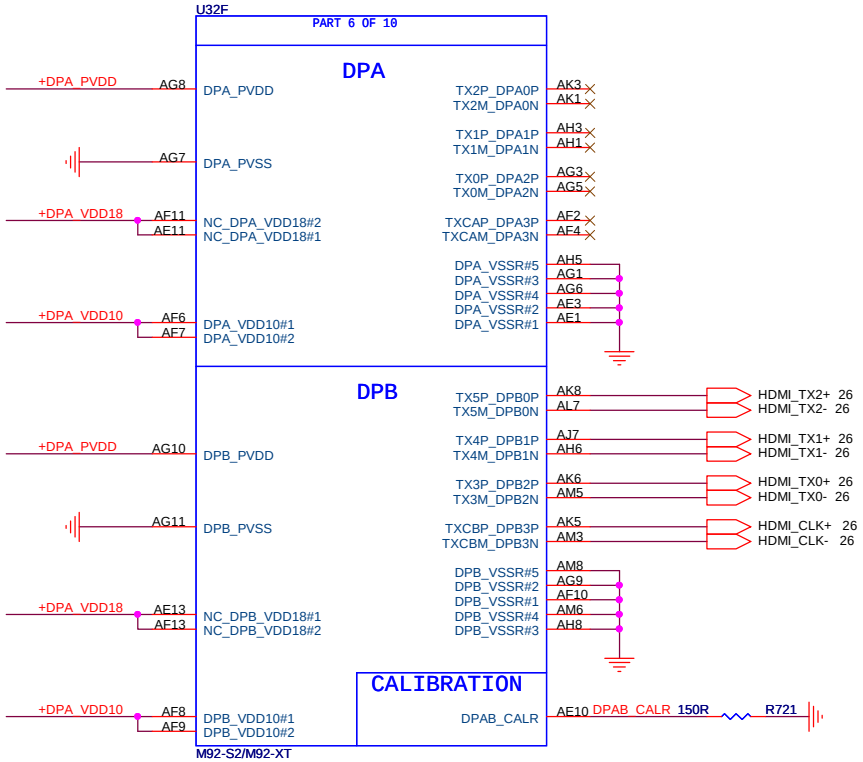

LVDS INTERFACE

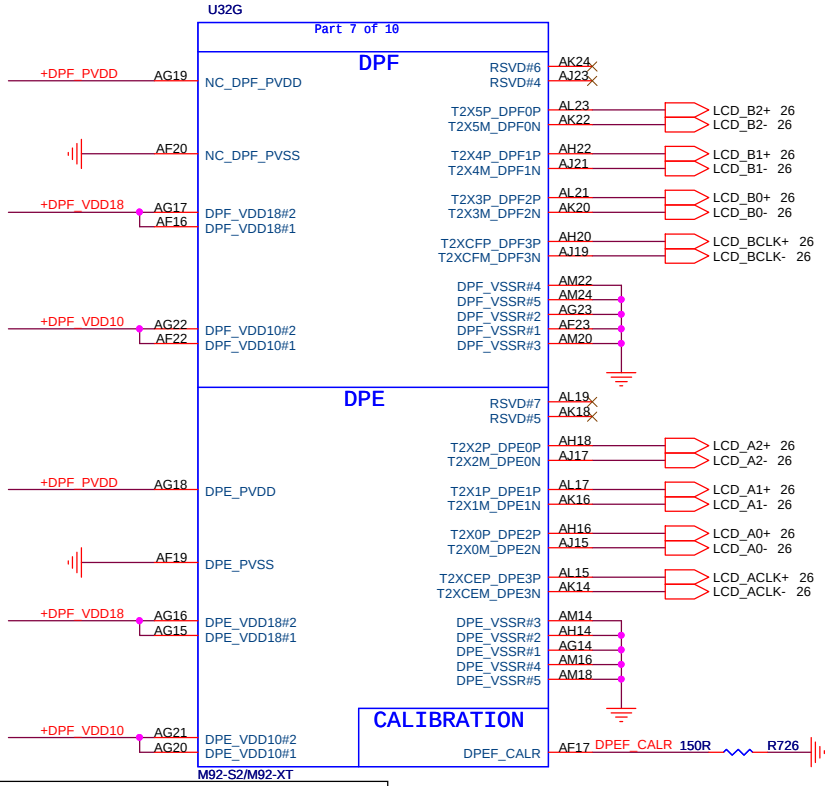

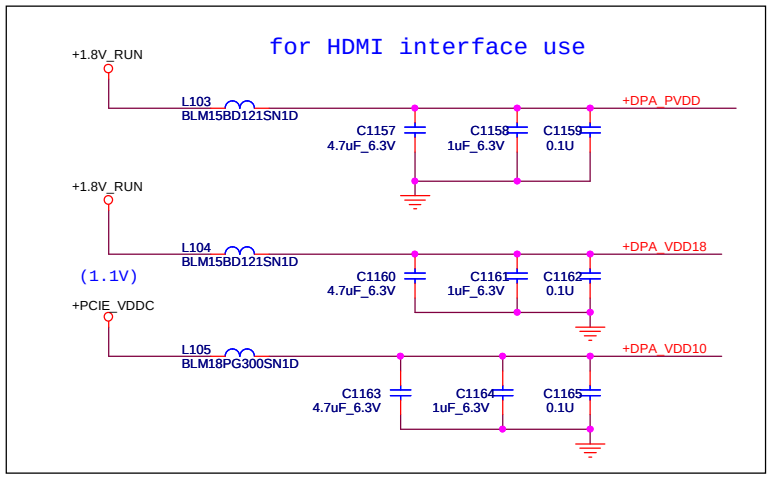

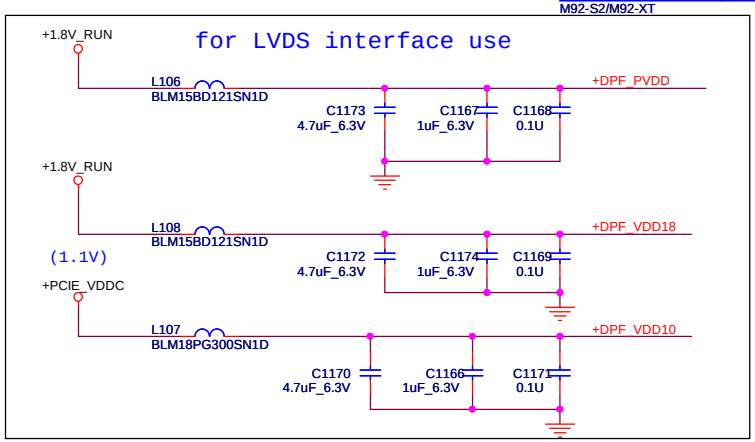

QUANTA COMPUTER

Title	VGA-M92-XT (PCIe)	
Size	Document Number FM8	Rev 2A
Date: Friday, November 21, 2008	Sheet 24 of 58	

WWW.AliSaler.Com

WWW.AliSaler.Com

QUANTA COMPUTER

Title	VGA-M82-S (PCIe)	
Size	Document Number FM8	Rev 2A
Date: Friday, November 21, 2008	Sheet 25 of 58	

WWW.AliSaler.Com

WWW.AliSaler.Com

Support the new imbeded diagnostics.

Populate R379 for DPST implementation only.

Shunt capacitors on LVDS for improving WWAN.

Adress : A9H --Contrast
AAH --Backlight

(3)08/22: delete SM Bus and add contrast function

HDMI

Remove P1

Title	LCD CONN & CK-SSCD
Size	Document Number FM8
Rev	2A
Date:	Friday, November 21, 2008
Sheet	26 of 58

WWW.AliSaler.Com

WWW.AliSaler.Com

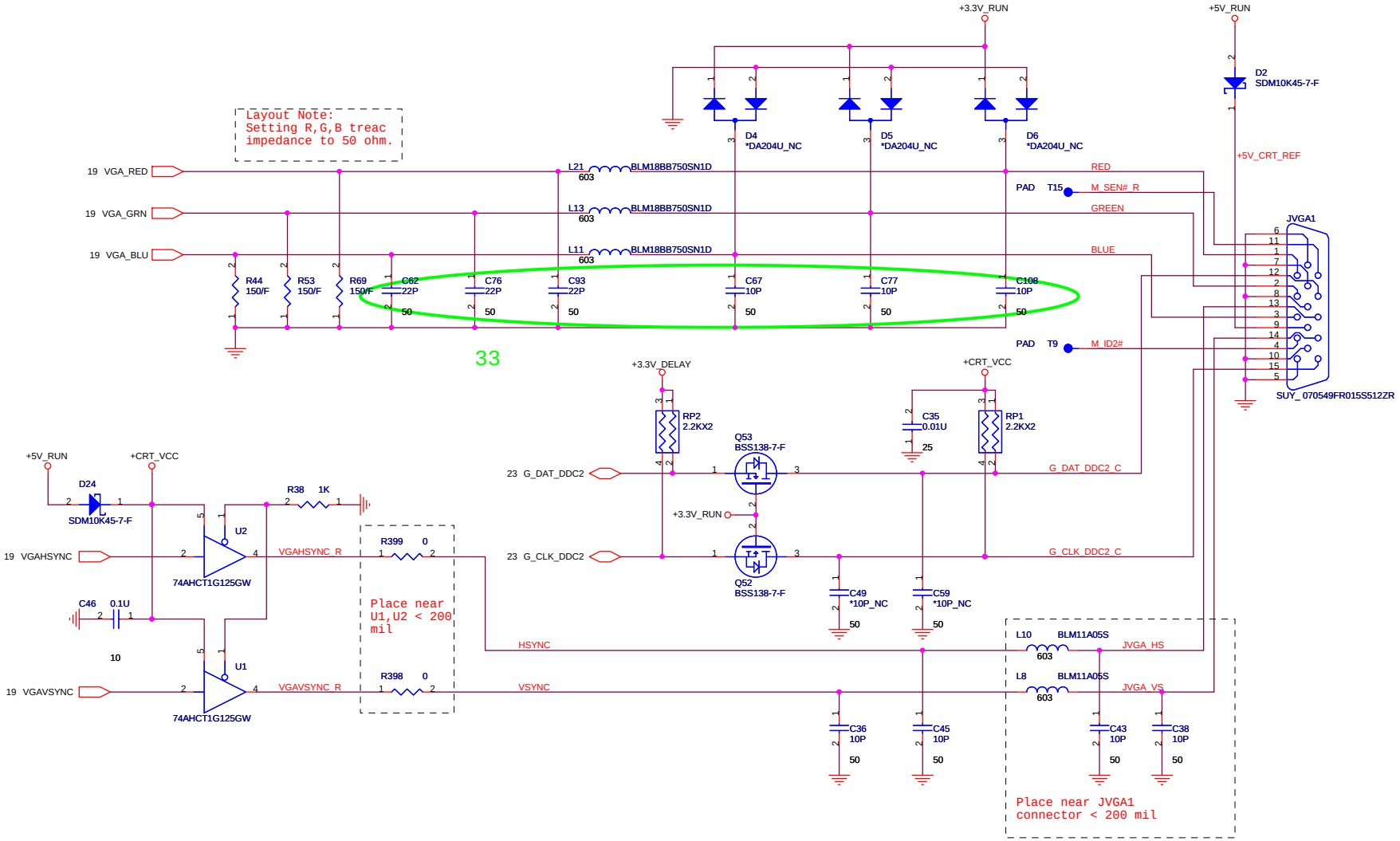

QUANTA COMPUTER

Title	CRT&TV CONN	
Size	Document Number FM8	Rev 2A
Date: Friday, November 21, 2008	Sheet 27 of 58	

WWW.AliSaler.Com

WWW.AliSaler.Com

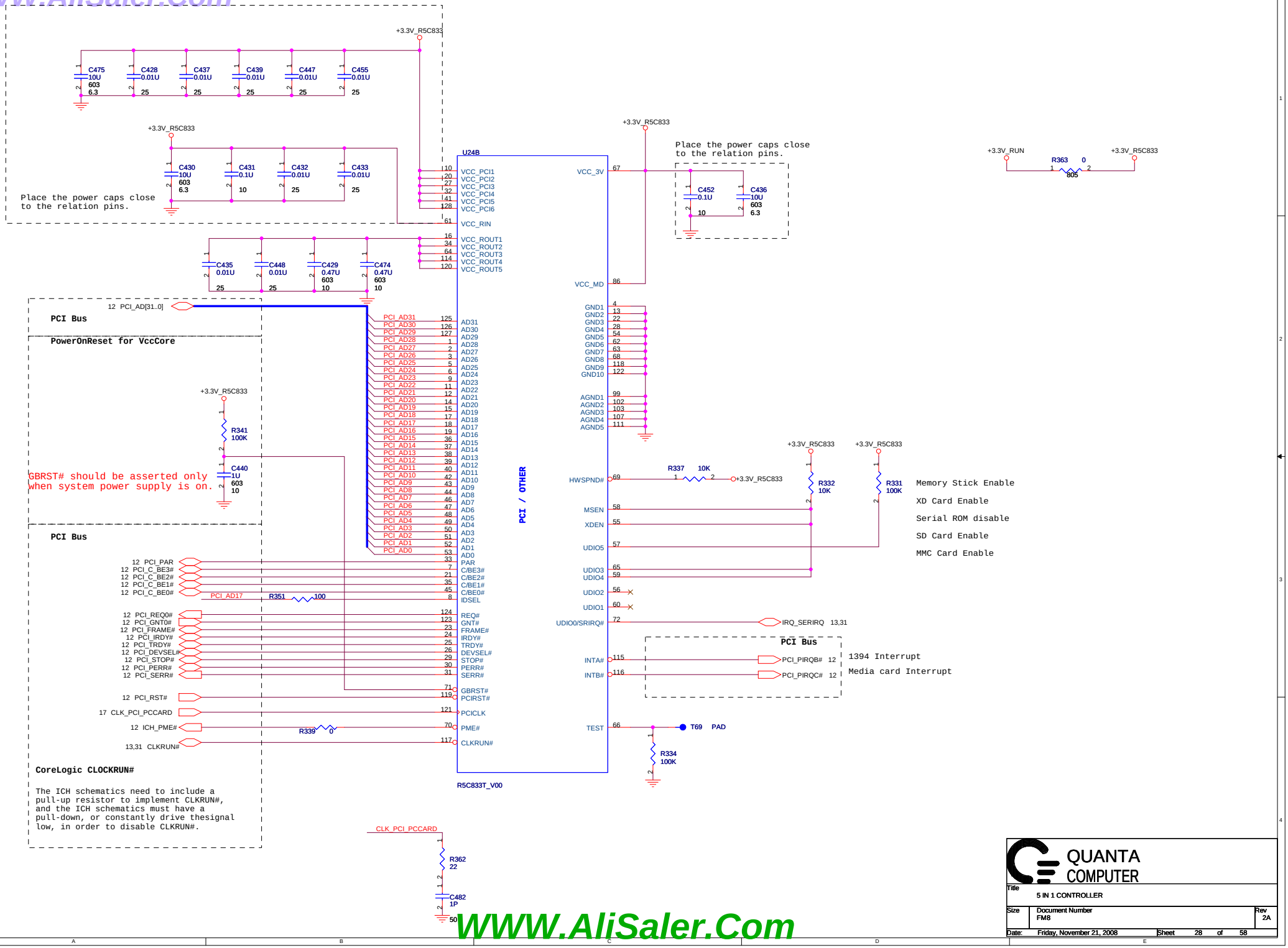

WWW.AliSaler.Com

QUANTA COMPUTER		
Title	5 IN 1 CONTROLLER	
Size	Document Number FM8	Rev 2A
Date: Friday, November 21, 2008	Sheet 28 of 58	

WWW.AliSaler.Com

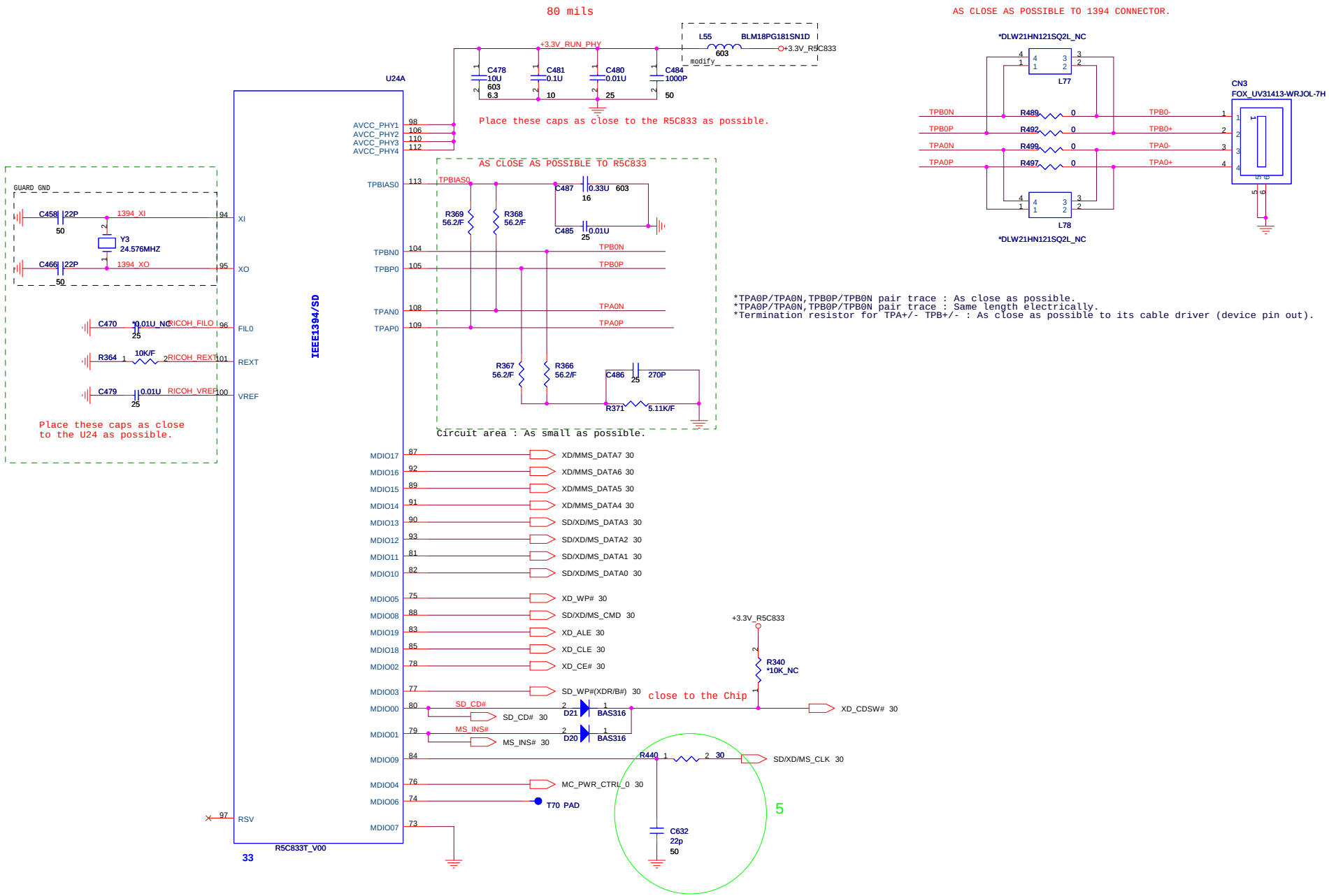

*TPA0P/TPA0N,TPB0P/TPB0N pair trace : As close as possible.
*TPA0P/TPA0N,TPB0P/TPB0N pair trace : Same length electrically.
*Termination resistor for TPA+/- TPB+/- : As close as possible to its cable driver (device pin out).

QUANTA COMPUTER

Title	IEEE 1394	
Size	Document Number FM8	Rev 2A
Date: Friday, November 21, 2008	Sheet 29 of 58	

WWW.AliSaler.Com

WWW.AliSaler.Com

Express Card/CARD READER

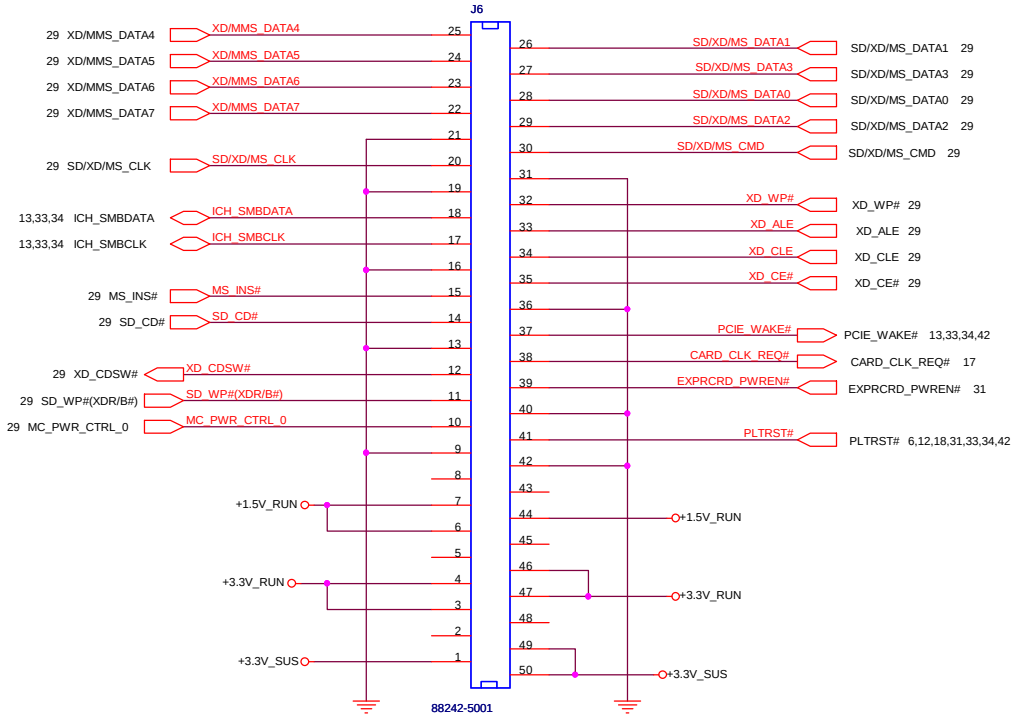

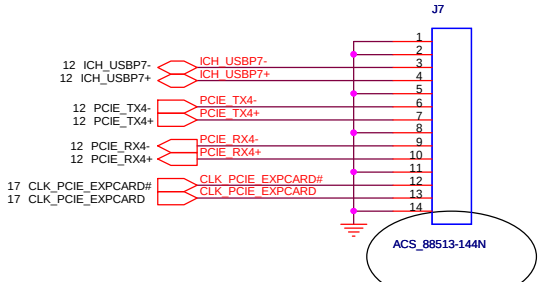

8/28:change PN to 88513-144N

WWW.AliSaler.Com

QUANTA COMPUTER

Title	ExpressCard/SmartCard	
Size	Document Number FM8	Rev 2A
Date: Friday, November 21, 2008	Sheet 30 of 58	

WWW.AliSaler.Com

ITE8512E LQFP-128L

U20

Place these caps close to ITE8512.

Charge and BAT

CLK, LCD and Thermal

G_Thermal and Media button

KEYBOARD

ADC/DAC

PWM

LPC

IR/UART

SMBUS

LPC/FWH FLASH

PS/2

EGPC

GPIO

32KHz Clock.

(3)08/22: delete SM Bus and add contrast function

Board ID Straps

Discrete

UMA

VGA_IDENTIFY

BID0

CHIPSET_ID1	BID1	USB_BACK_EN#	FM6B(UMA)	FM6 (Dis)
0	0	0	SSI (X00)	SSI (X00)
0	0	1	PT (X01)	PT (X01)
0	1	0	ST (X02)	ST (X02)
0	1	1	QT (A00)	QT (A00)
0	0	0	(A01)	(A01)
0	0	1		

ITE8512E
LQFP128-16X16-4-FX2

QUANTA COMPUTER

Title: Ultra I/O Controller ECE5028

Size: Document Number FM8 Rev 2A

Date: Friday, November 21, 2008 Sheet 31 of 58

WWW.AliSaler.Com

WWW.AliSaler.Com

16Mbit (2M Byte), SPI

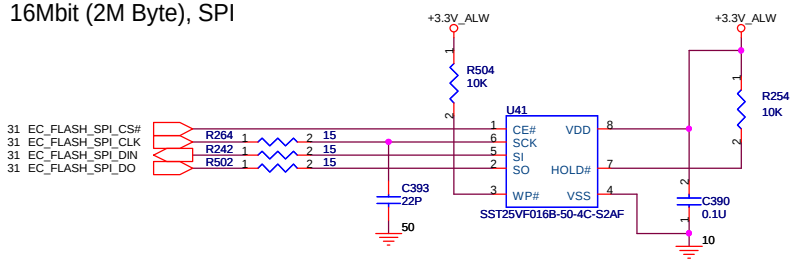

RTC BATTERY

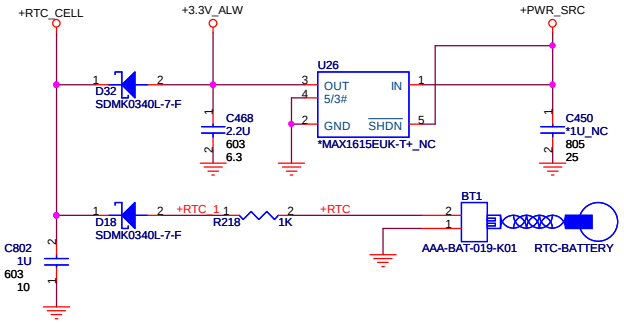

QUANTA COMPUTER

Title	Ultra I/O Controller ECE5028	
Size	Document Number FM8	Rev 2A
Date: Friday, November 21, 2008	Sheet 32 of 58	

WWW.AliSaler.Com

WWW.AliSaler.Com

MiniCard Robson, BT. UWB connector

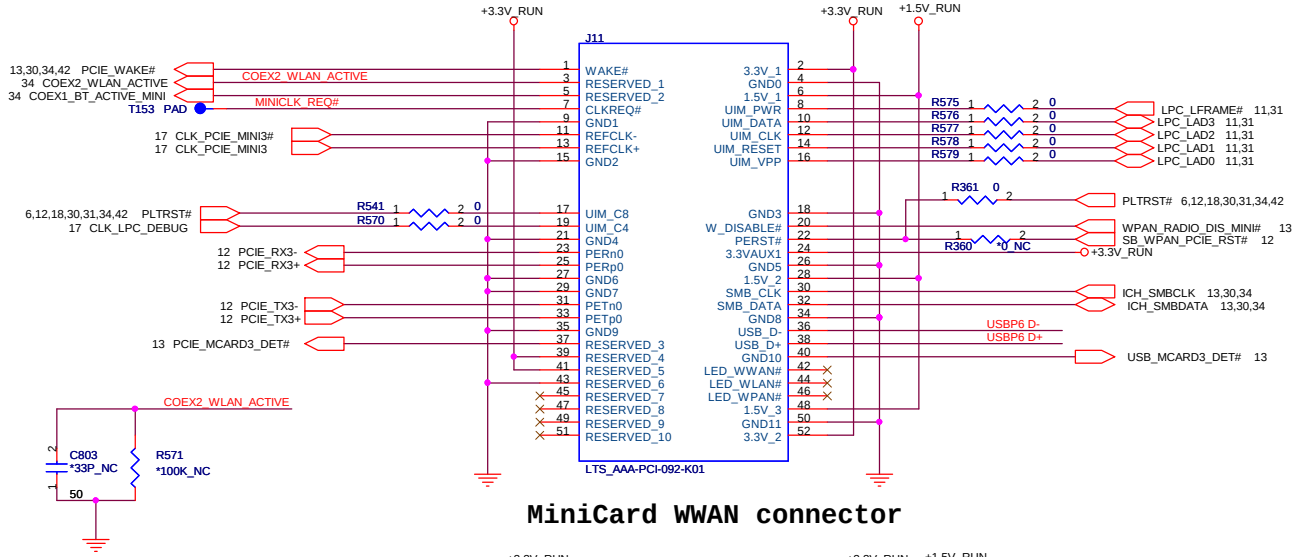

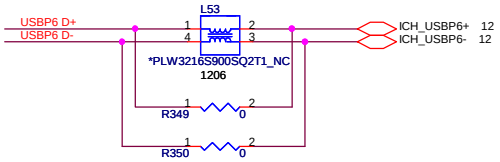

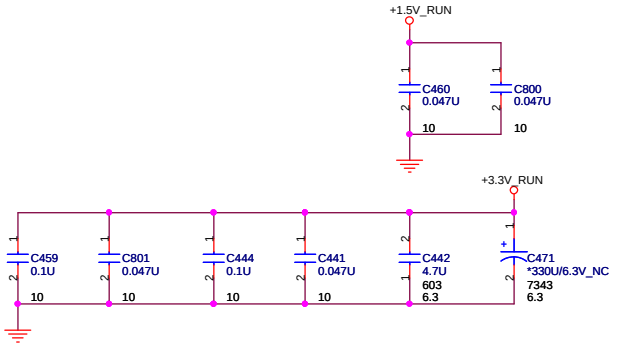

MiniCard WWAN connector

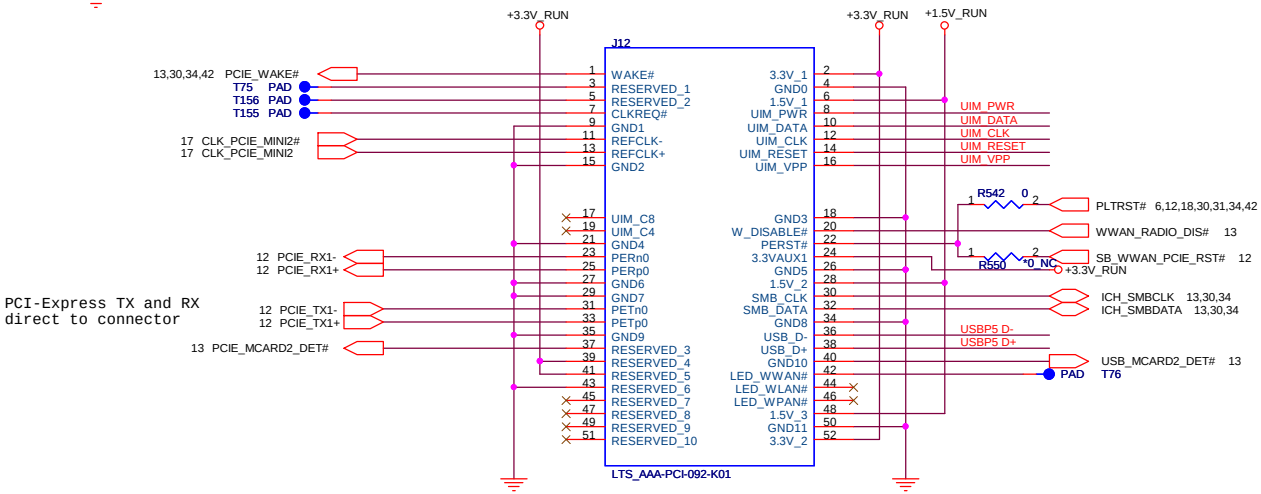

PCI-Express TX and RX direct to connector

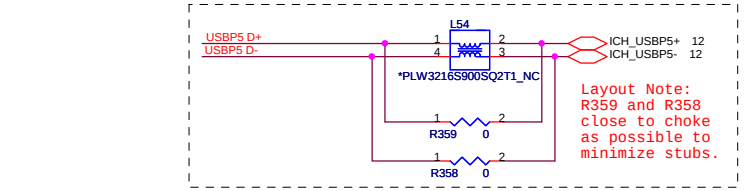

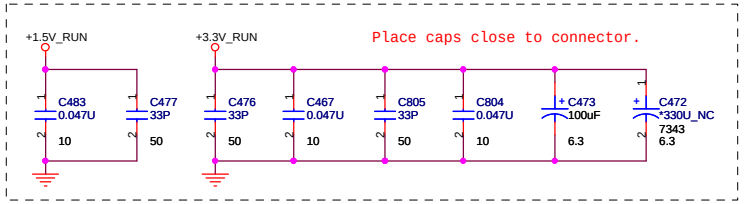

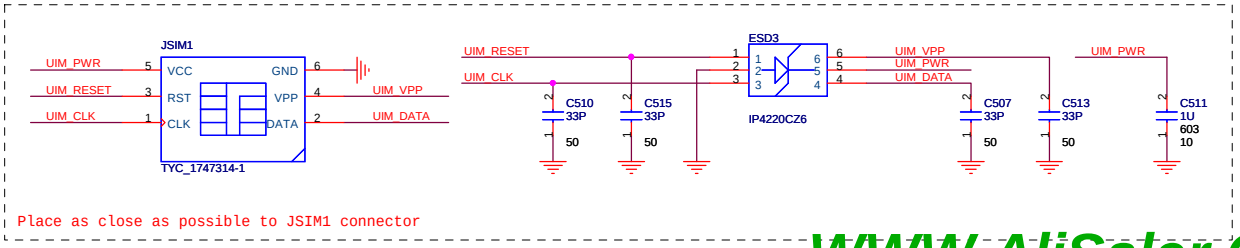

QUANTA COMPUTER		
Title: MINI-PCI		
Size	Document Number: FM8	Rev: 2A
Date: Friday, November 21, 2008	Sheet 33 of 58	

WWW.AliSaler.Com

WWW.AliSaler.Com

MiniCard WLAN connector

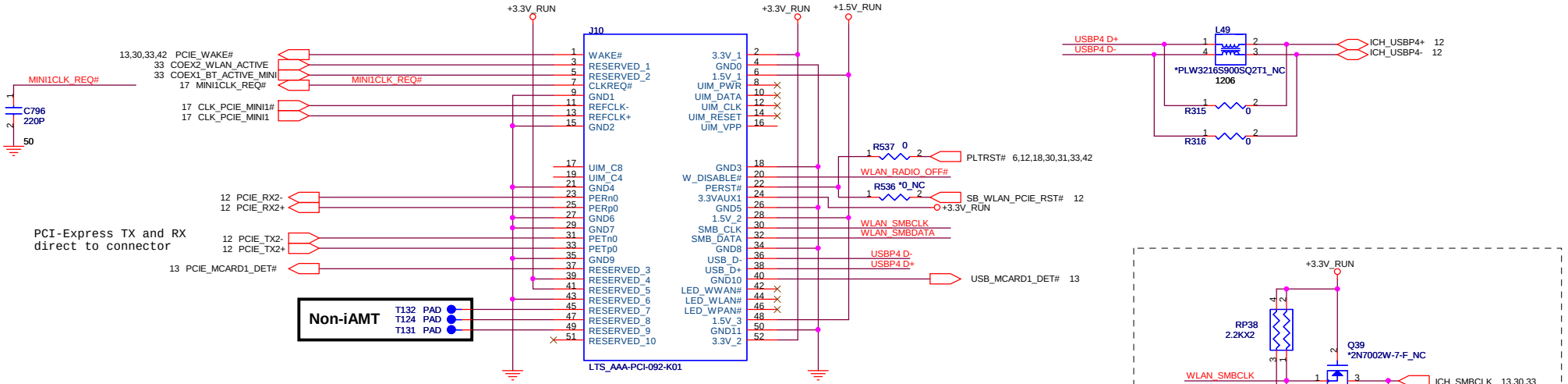

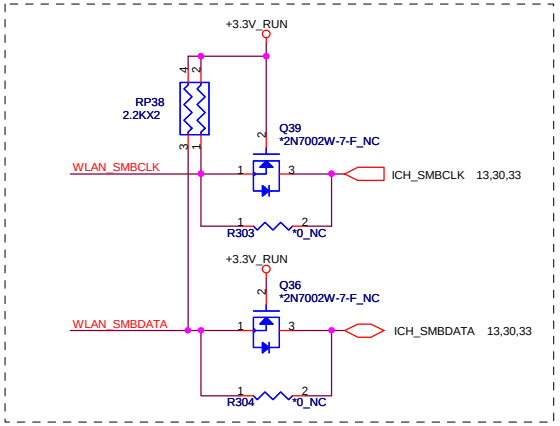

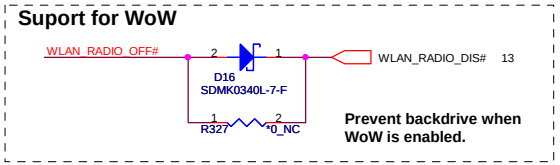

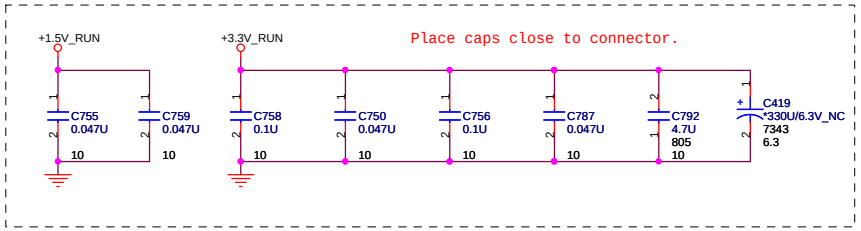

QUANTA COMPUTER

Title	MDC CONN.	
Size	Document Number FM8	Rev 2A
Date: Friday, November 21, 2008	Sheet 34 of 58	

WWW.AliSaler.Com

WWW.AliSaler.Com

External USB PORT hookup reference. Your design may need more or less external ports and may be mapped differently

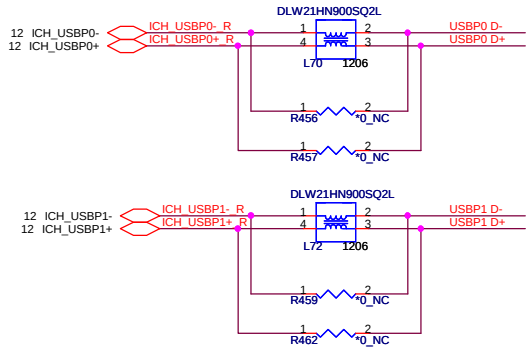

Platforms should put in PADS for the USB chokes if they have the room. Chokes should be NOPOP.

Place ESD diodes as close as USB connector.

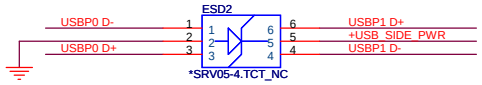

Side External USBX2

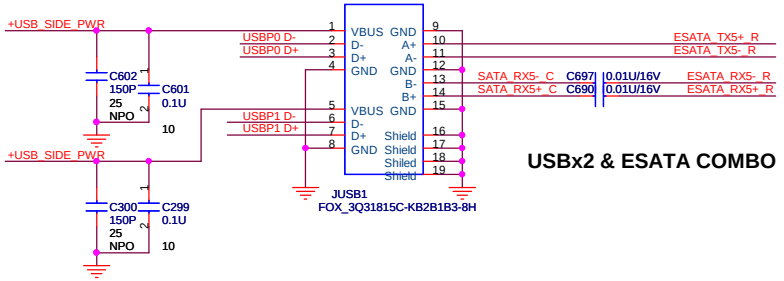

USBx2 & ESATA COMBO

E-SATA Re-driver

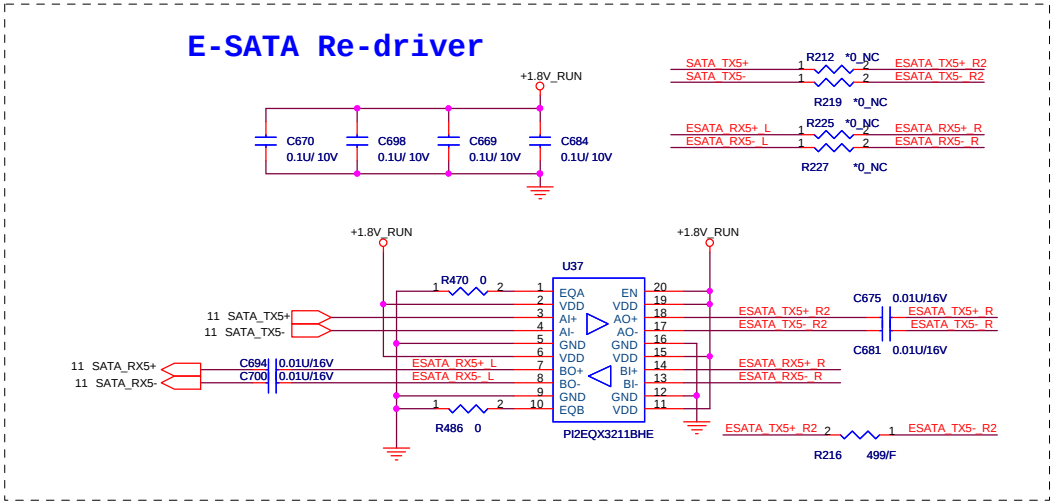

Place one 150uF cap by each USB connector.

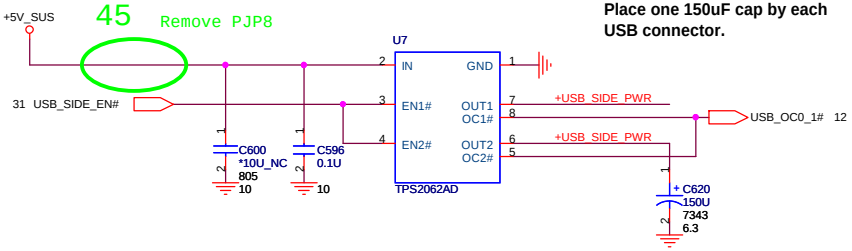

Each channel is 1A

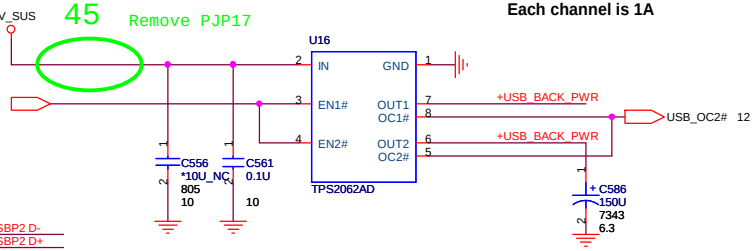

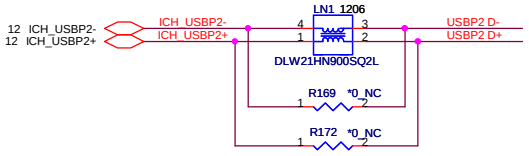

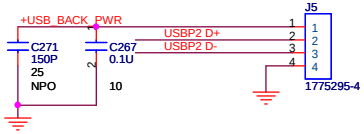

Place ESD diodes as close as USB connector.

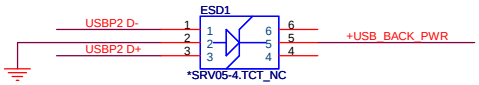

WWW.AliSaler.Com

QUANTA COMPUTER

Title	SERIAL PORT & USB	
Size	Document Number FM8	Rev 2A
Date: Friday, November 21, 2008	Sheet 35 of 58	

WWW.AliSaler.Com

SATA Connector.

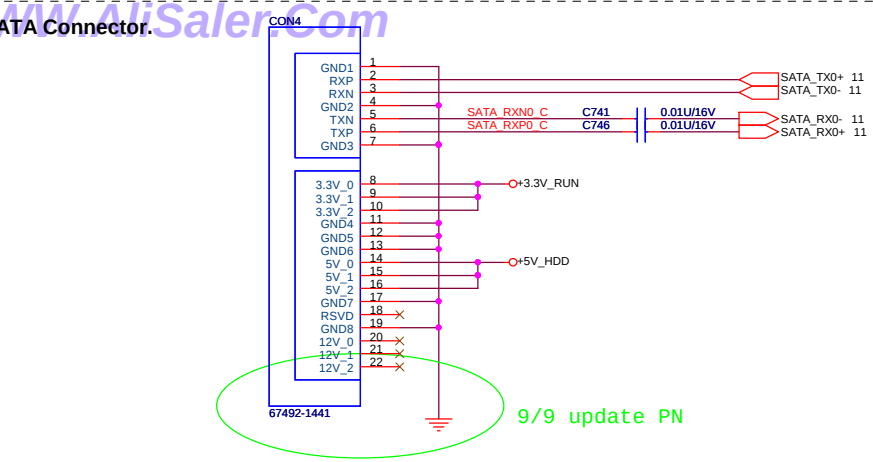

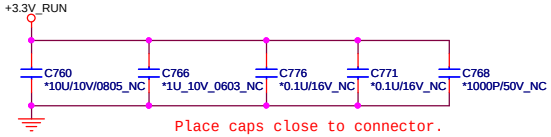

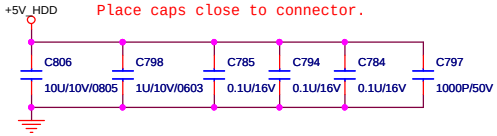

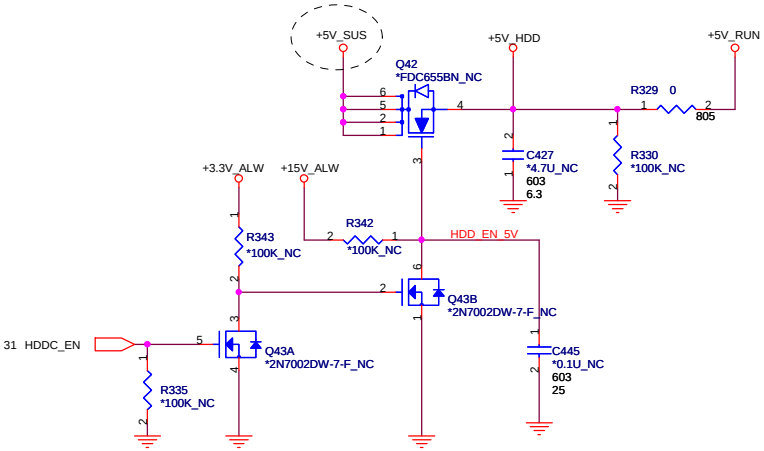

ODD Connector

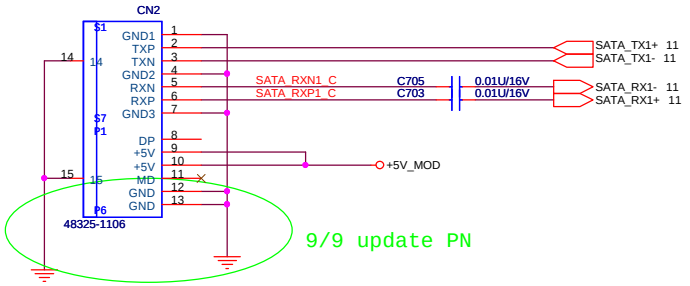

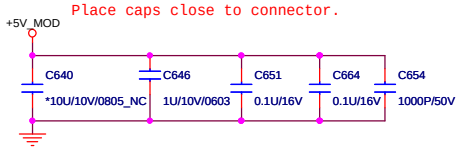

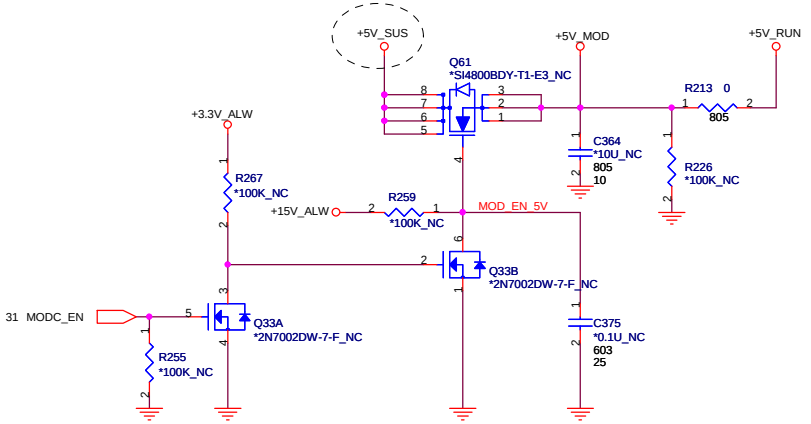

QUANTA COMPUTER

Title	SATA (HDD&CD_ROM)	
Size	Document Number FM8	Rev 2A
Date: Friday, November 21, 2008	Sheet 36 of 58	

WWW.AliSaler.Com

WWW.AliSaler.Com

Touch Pad

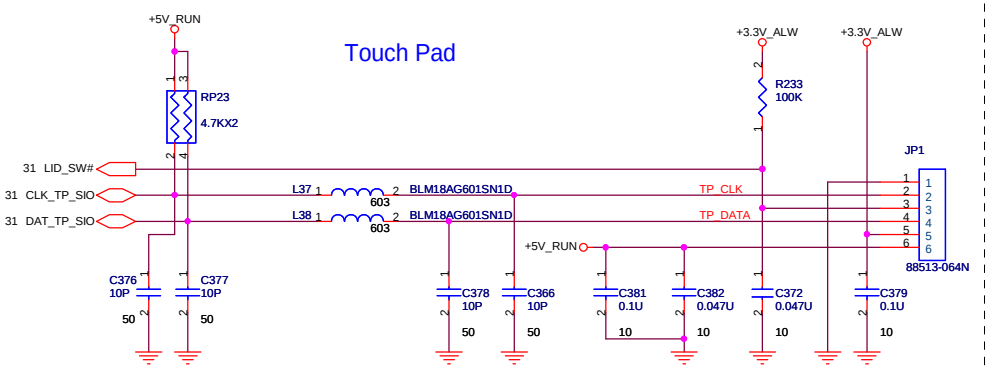

KEYBOARD CONNECTOR

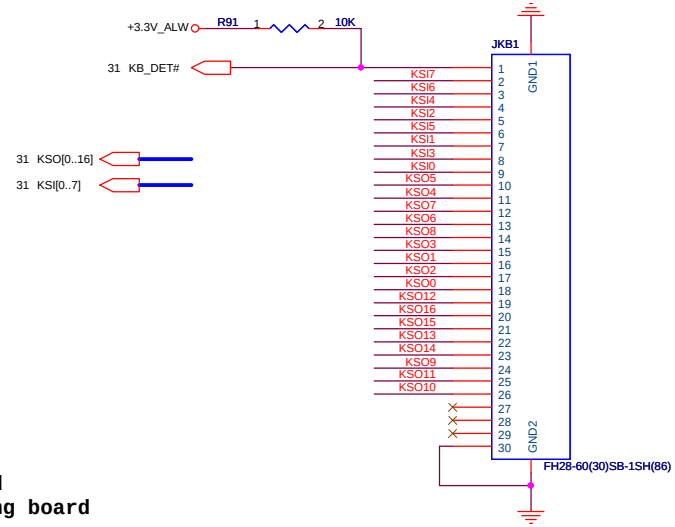

08-05 add
For running board

33

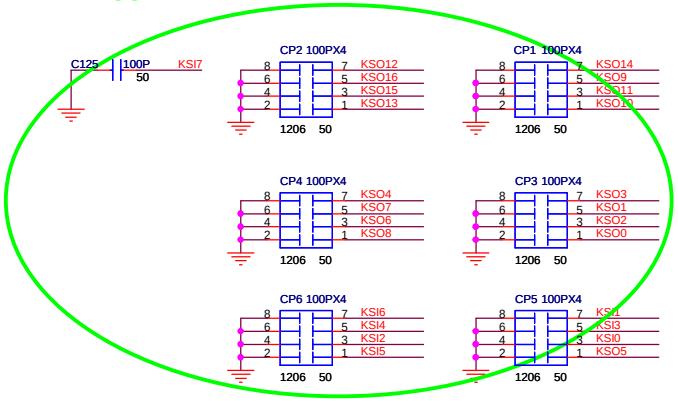

100P CAPS CLOSE TO JKB1

Key board Illumination

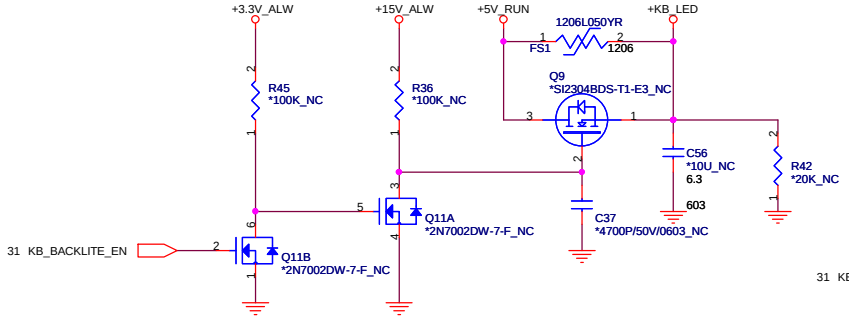

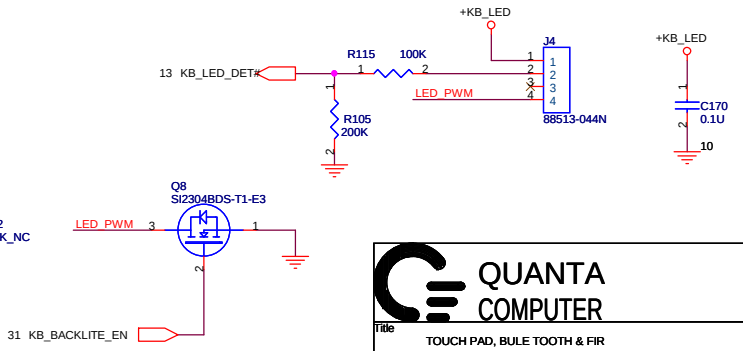

QUANTA COMPUTER

Title	TOUCH PAD, BULE TOOTH & FIR	
Size	Document Number FM8	Rev 2A
Date: Friday, November 21, 2008	Sheet 37 of 58	

WWW.AliSaler.Com

WWW.AliSaler.Com

Battery status.

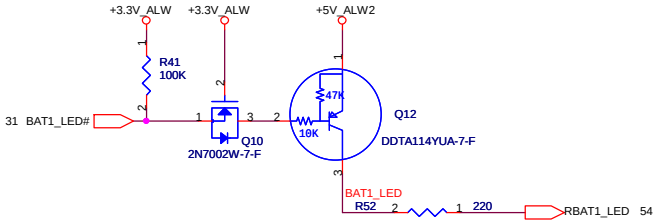

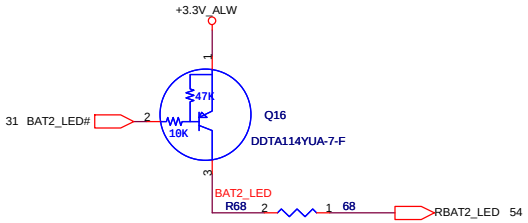

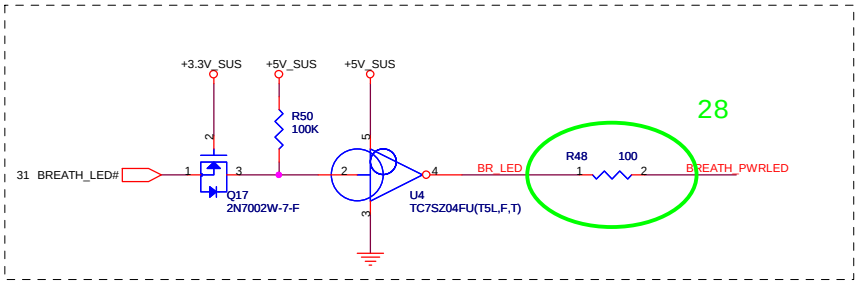

Power Switch

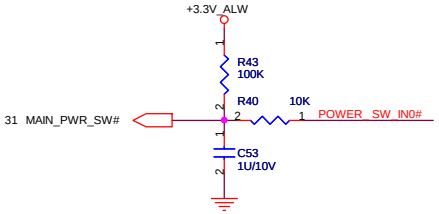

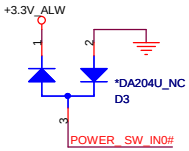

Power button cable

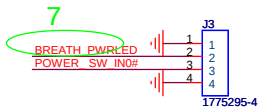

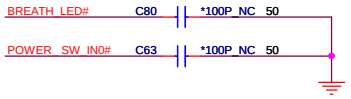

QUANTA COMPUTER

Title	SWITCH, KEYBOARD & LED	
Size	Document Number FM8	Rev 2A
Date: Friday, November 21, 2008	Sheet 38 of 58	

WWW.AliSaler.Com

WWW.AliSaler.Com

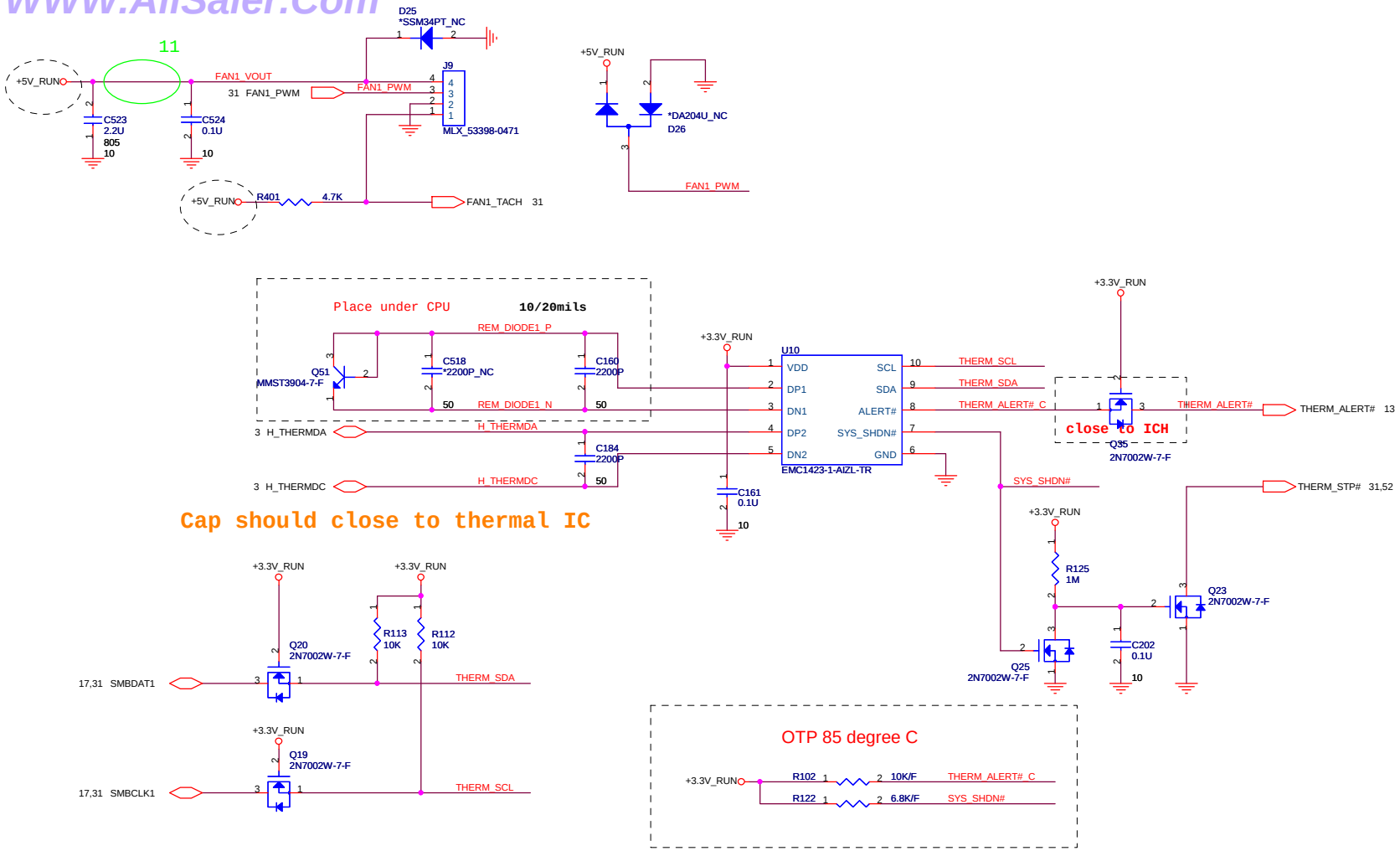

QUANTA COMPUTER

Title	FAN & THERMAL	
Size	Document Number FM8	Rev 2A
Date: Friday, November 21, 2008	Sheet 39 of 58	

WWW.AliSaler.Com

WWW.AliSaler.Com

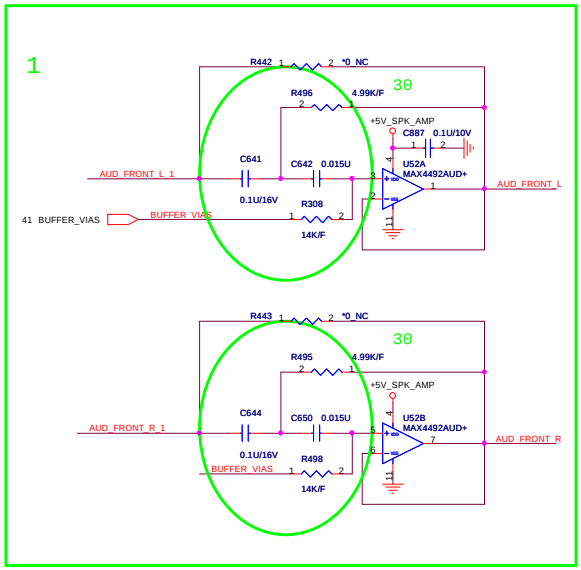

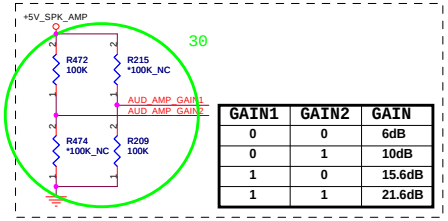

GAIN1	GAIN2	GAIN
0	0	6dB
0	1	10dB
1	0	15.6dB
1	1	21.6dB

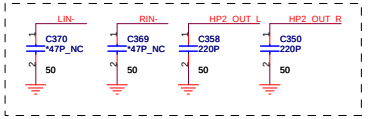

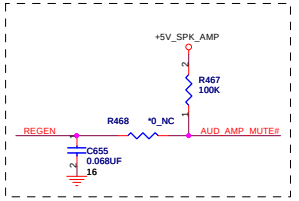

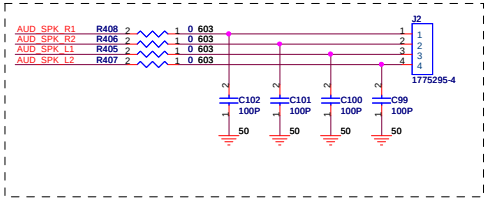

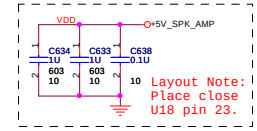

INTERNAL SPEAKER AMP

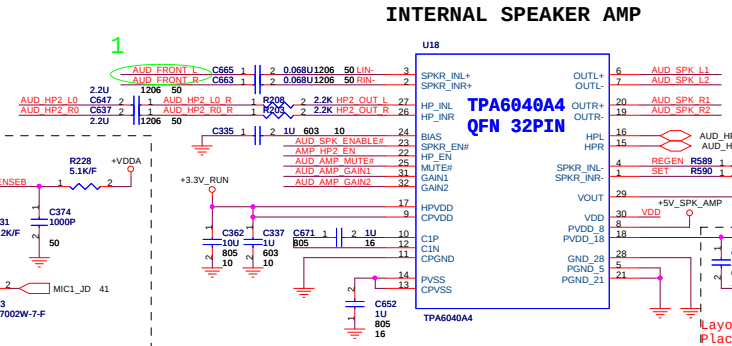

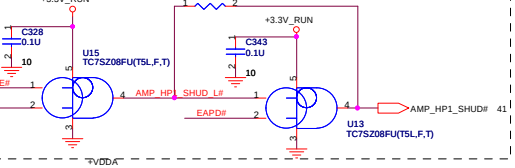

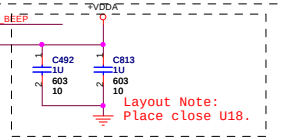

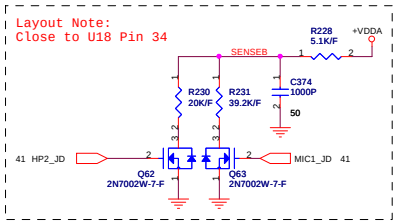

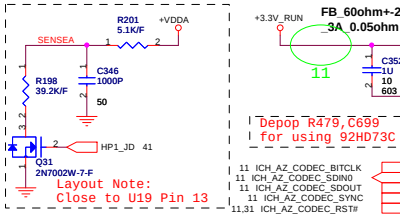

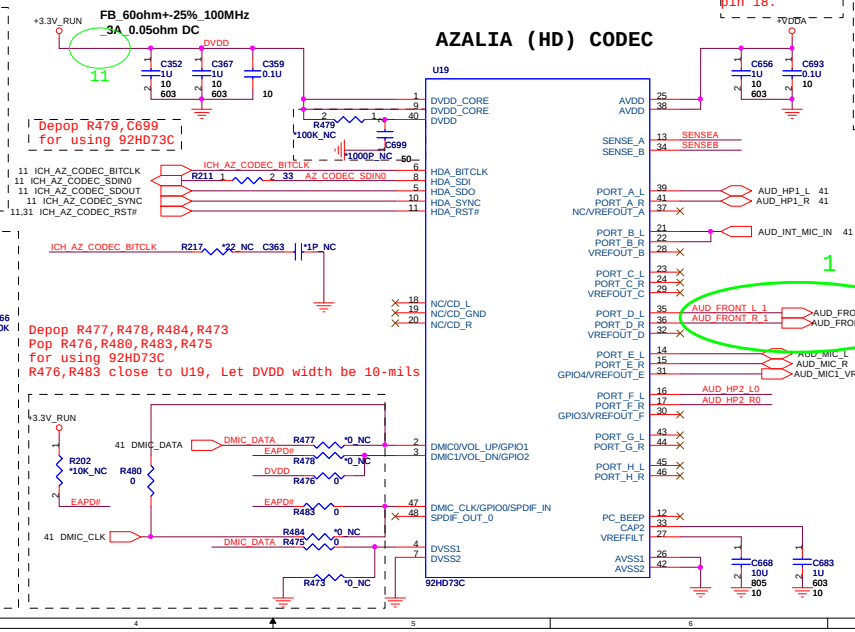

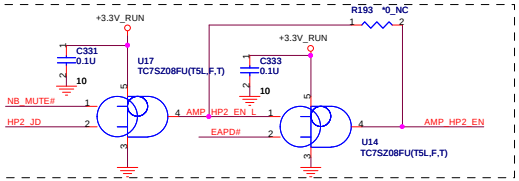

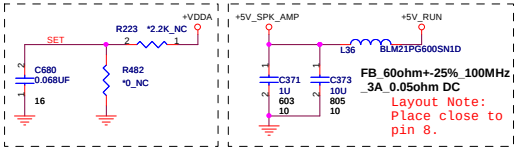

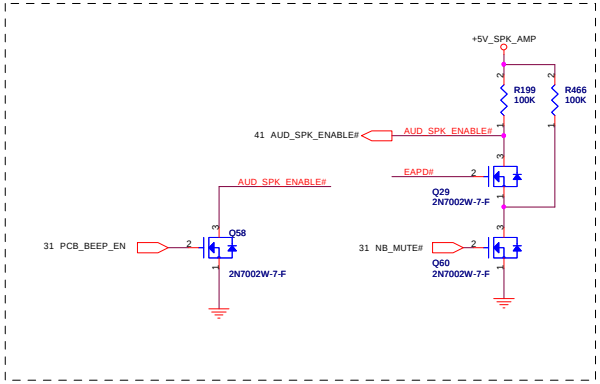

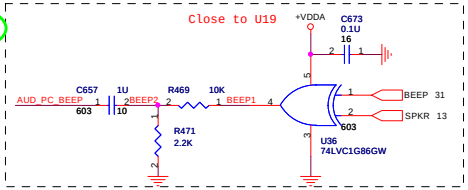

QUANTA COMPUTER

Title	Azelia CODEC	
Size	Document Number FMB	Rev 2A
Date: Friday, November 21, 2008	Sheet 40 of 58	

WWW.AliSaler.Com

www.AliSaler.Com

Headphone Jack
Stereo MIC Jack

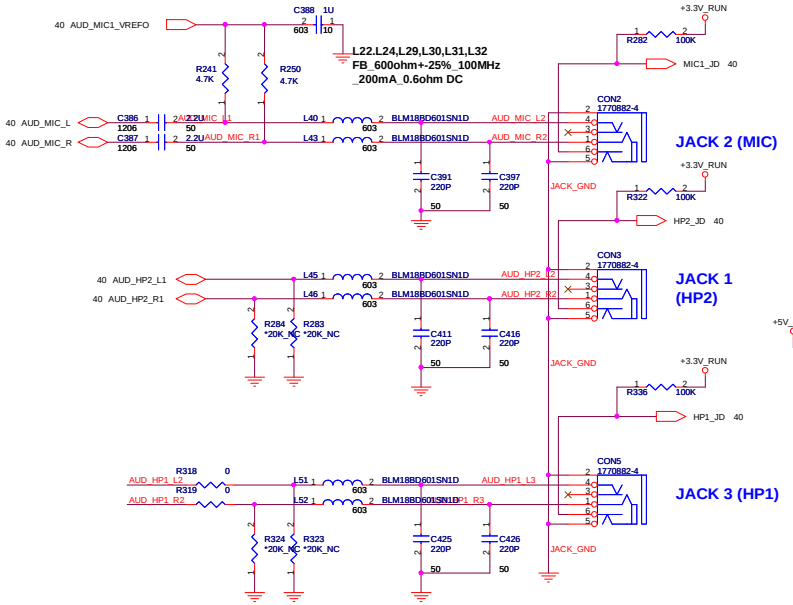

Array Microphone & Camera

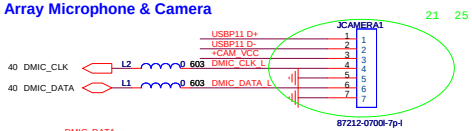

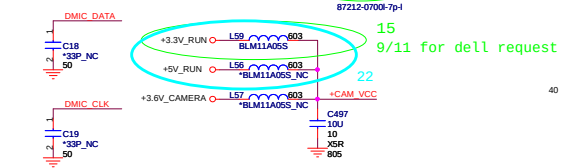

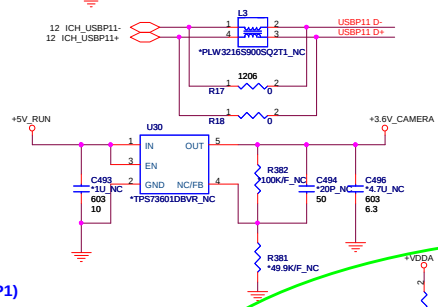

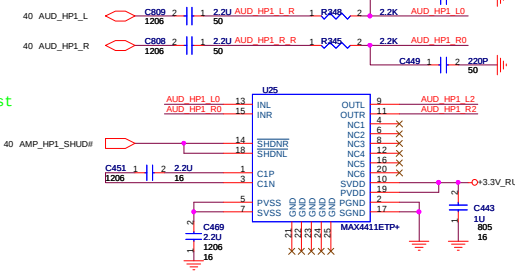

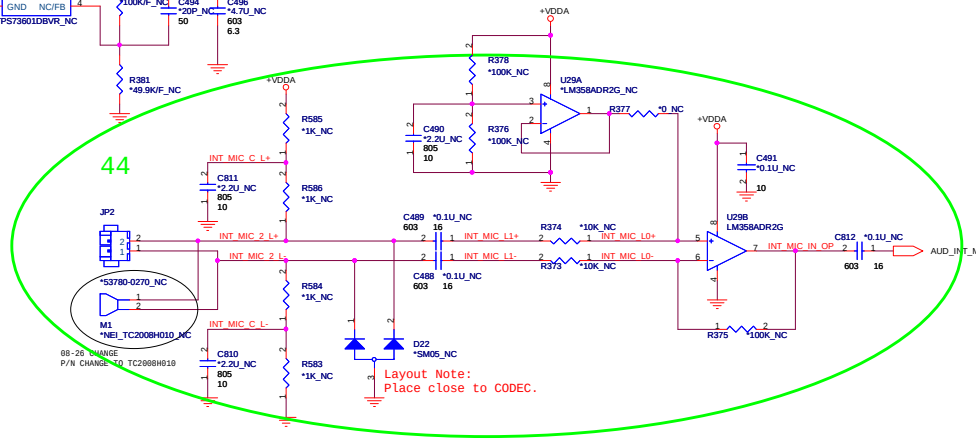

1

INTERNAL SUBWOOFER AMP

SYNC	Condition
VDD	Spread-spectrum mode with fS = 1200kHz ±70kHz.
GND	Fixed-frequency mode with fS = 1100kHz.
FLOAT	Fixed-frequency mode with fS = 1500kHz.
Clocked	Fixed-frequency mode with fS = external clock frequency.

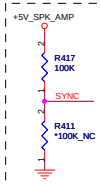

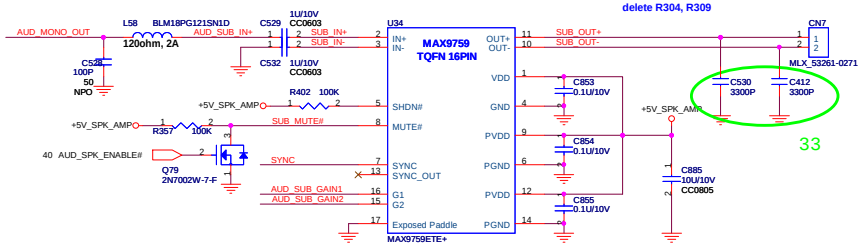

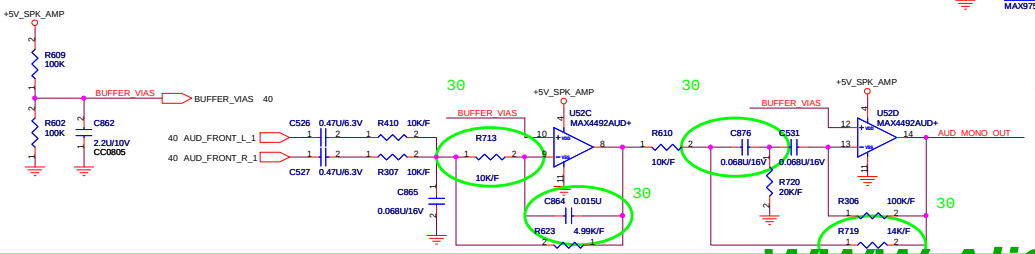

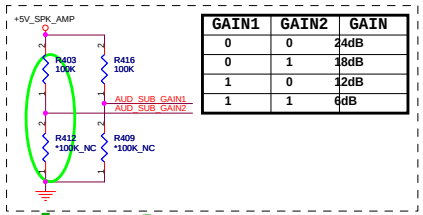

GAIN1	GAIN2	GAIN
0	0	24dB
0	1	18dB
1	0	12dB
1	1	6dB

QUANTA COMPUTER

Title	AUDIO CONN	
Size	Document Number FM8	Rev 2A
Date: Friday, November 21, 2008	Sheet 41 of 58	

WWW.AliSaler.Com

WWW.AliSaler.Com

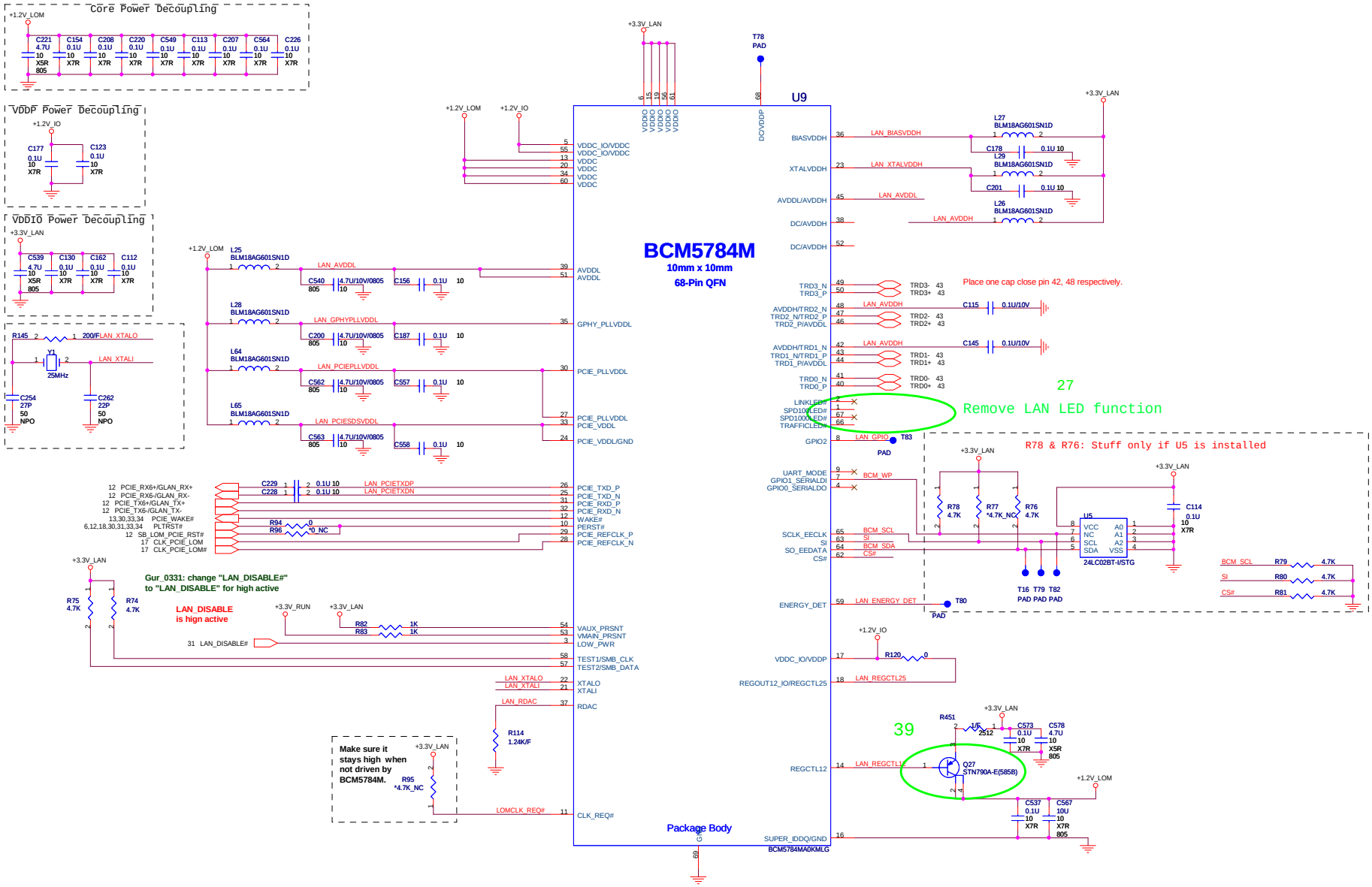

Title	LAN		
Size	Document Number FM8		Rev 2A
Date:	Friday, November 21, 2008	Sheet 42 of 58	

WWW.AliSaler.Com

WWW.AliSaler.Com

50

RJ-45 Connector

TRANSFORM

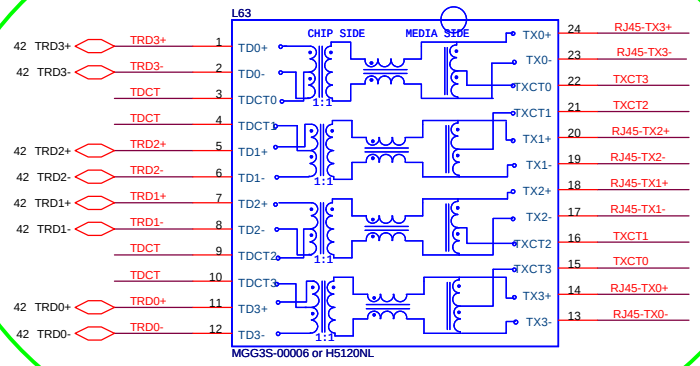

27

Remove LAN LED function

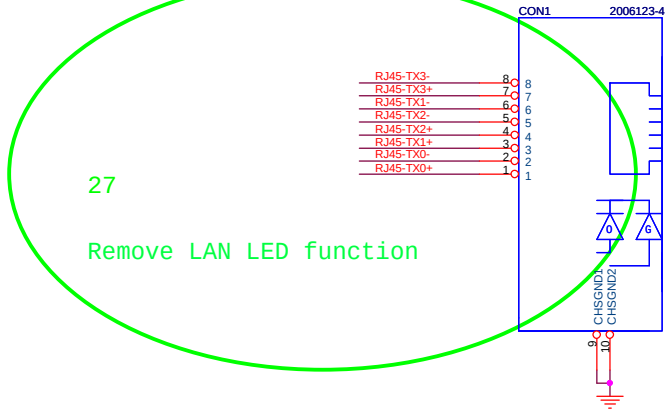

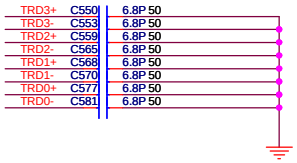

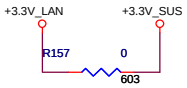

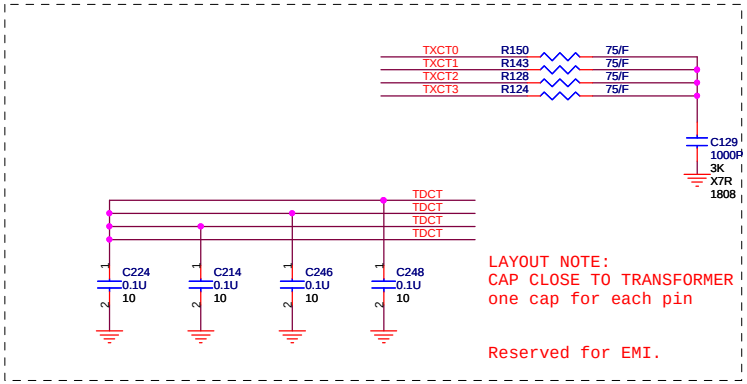

QUANTA COMPUTER

Title	LAN SWITCH	
Size	Document Number FM8	Rev 2A
Date: Friday, November 21, 2008	Sheet 43 of 58	

WWW.AliSaler.Com

WWW.AliSaler.Com

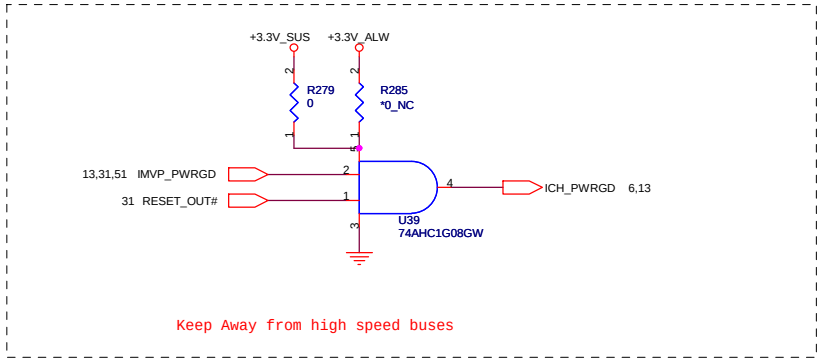

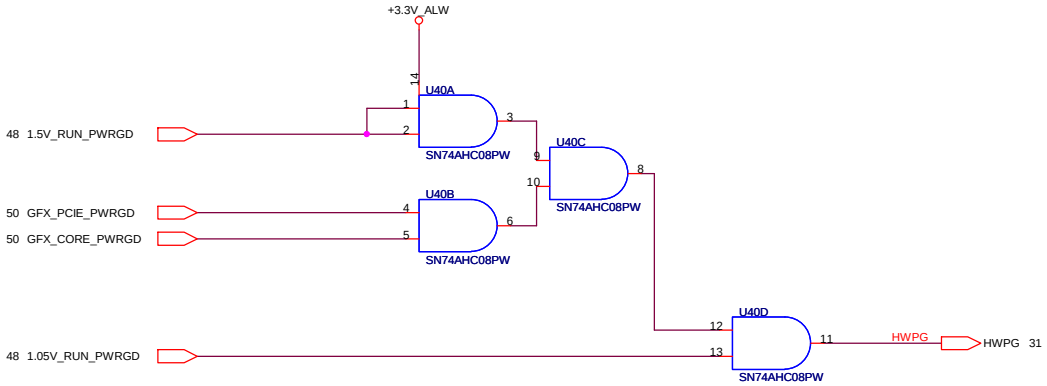

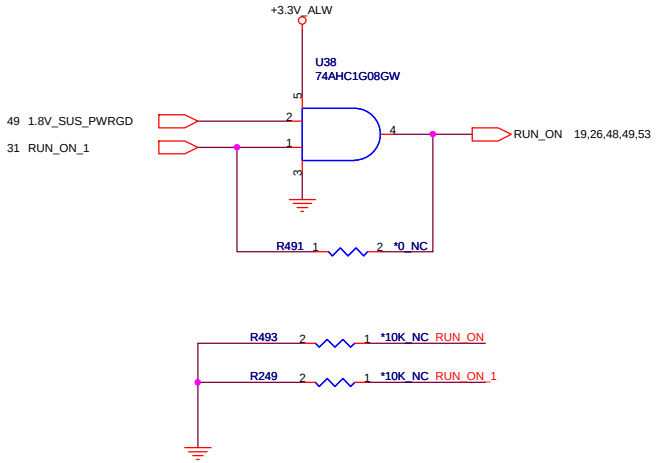

QUANTA COMPUTER		
Title: System Reset Circuit		
Size	Document Number: FM8	Rev: 2A
Date: Friday, November 21, 2008	Sheet 44 of 58	

WWW.AliSaler.Com

WWW.AliSaler.Com

QUANTA COMPUTER

Title	Battery Selector	
Size	Document Number FM8	Rev 2A
Date: Friday, November 21, 2008	Sheet 45 of 58	

WWW.AliSaler.Com

WWW.AliSaler.Com

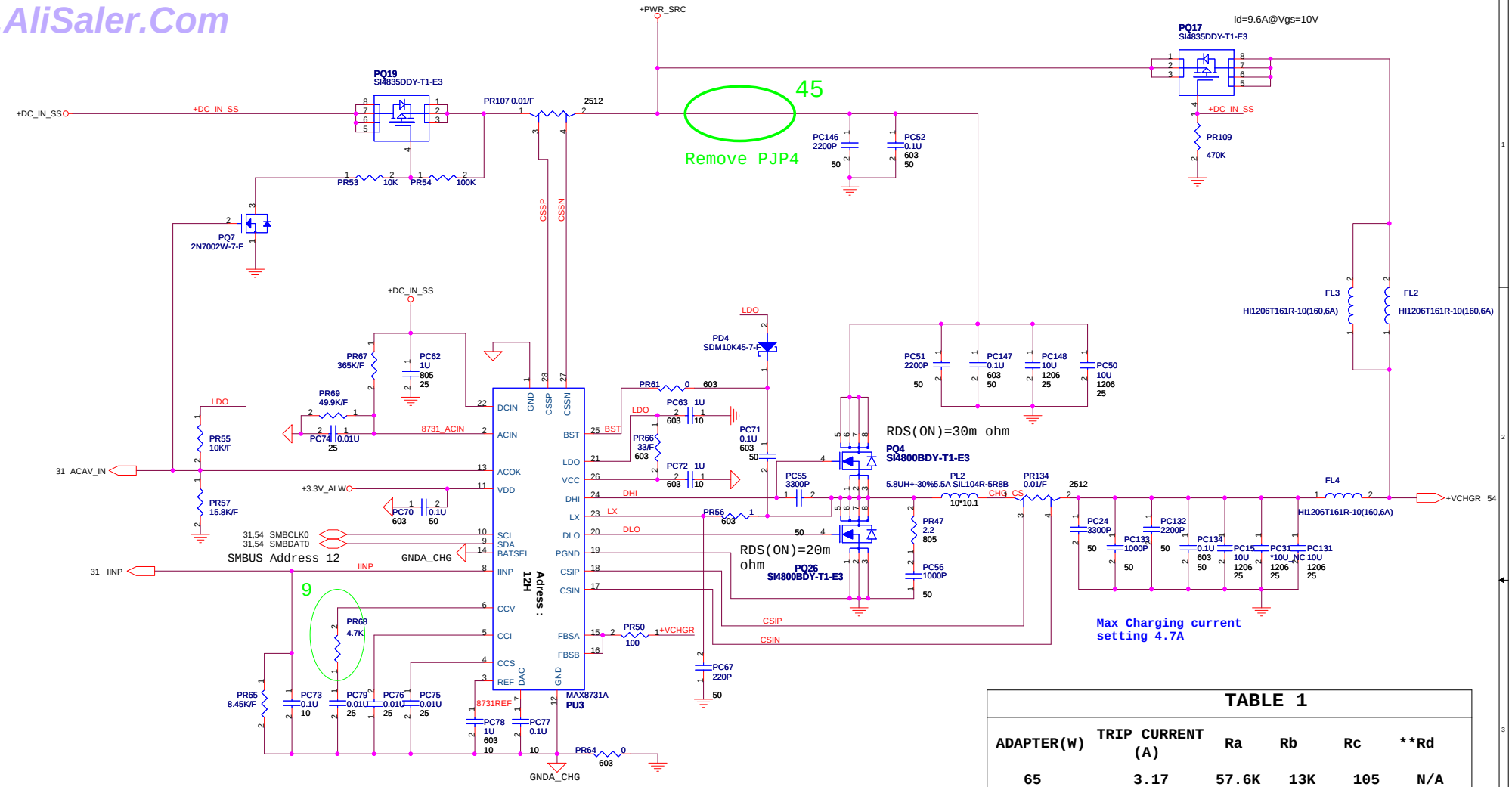

TABLE 1					
ADAPTER(W)	TRIP CURRENT (A)	Ra	Rb	Rc	**Rd
65	3.17	57.6K	13K	105	N/A
90	4.43	51.1K	17.8K	348	33.2K
130	6.43	32.4K	20.5K	100	27.4K
150	7.43	30.9K	24.9K	432	88.7K
200	9.75	19.1K	28K	301	36.5K
230	11.28 (see note3)	32.4K	6.49K	115	N/A

Note 1: PR96 is popluated if ADAPT_TRIP_SEL is used to program for the next lower adapter.
ADAPT_TRIP_SET is floating for the higher adaptor, grounded for the lower adaptor.

Note 2: 24.9K at PR96 allows the 65W adaptor seetting to switch down to 45W.

Note 3: PR35 must be 5mOhms instead of 10mOhms for the 230W adaptor.

QUANTA COMPUTER

Title	Charger (ISL88731)	
Size	Document Number FM8	Rev 2A
Date: Friday, November 21, 2008	Sheet 46 of 58	

WWW.AliSaler.Com

WWW.AliSaler.Com

BLANK PAGE FOR PAGE NUMBER SAME AS DISCRETE

WWW.AliSaler.Com

QUANTA COMPUTER

Title		
Size	Document Number FM8	Rev 2A
Date: Friday, November 21, 2008	Sheet 47 of 58	

WWW.AliSaler.Com

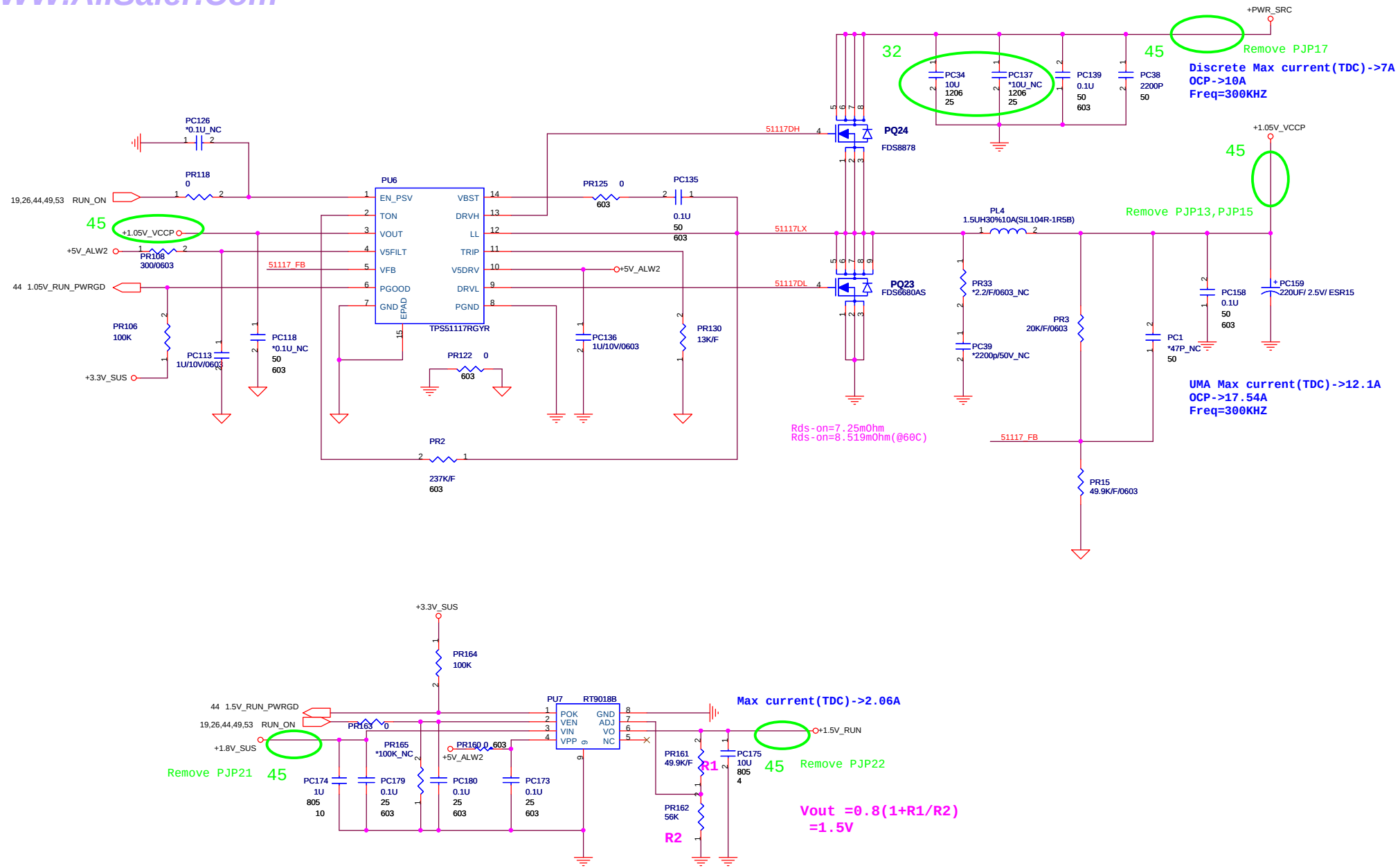

QUANTA COMPUTER

Title	1.05_VCCP & 1.5V_RUN	
Size	Document Number FM8	Rev 2A
Date: Friday, November 21, 2008	Sheet 48 of 58	

WWW.AliSaler.Com

WWW.AliSaler.Com

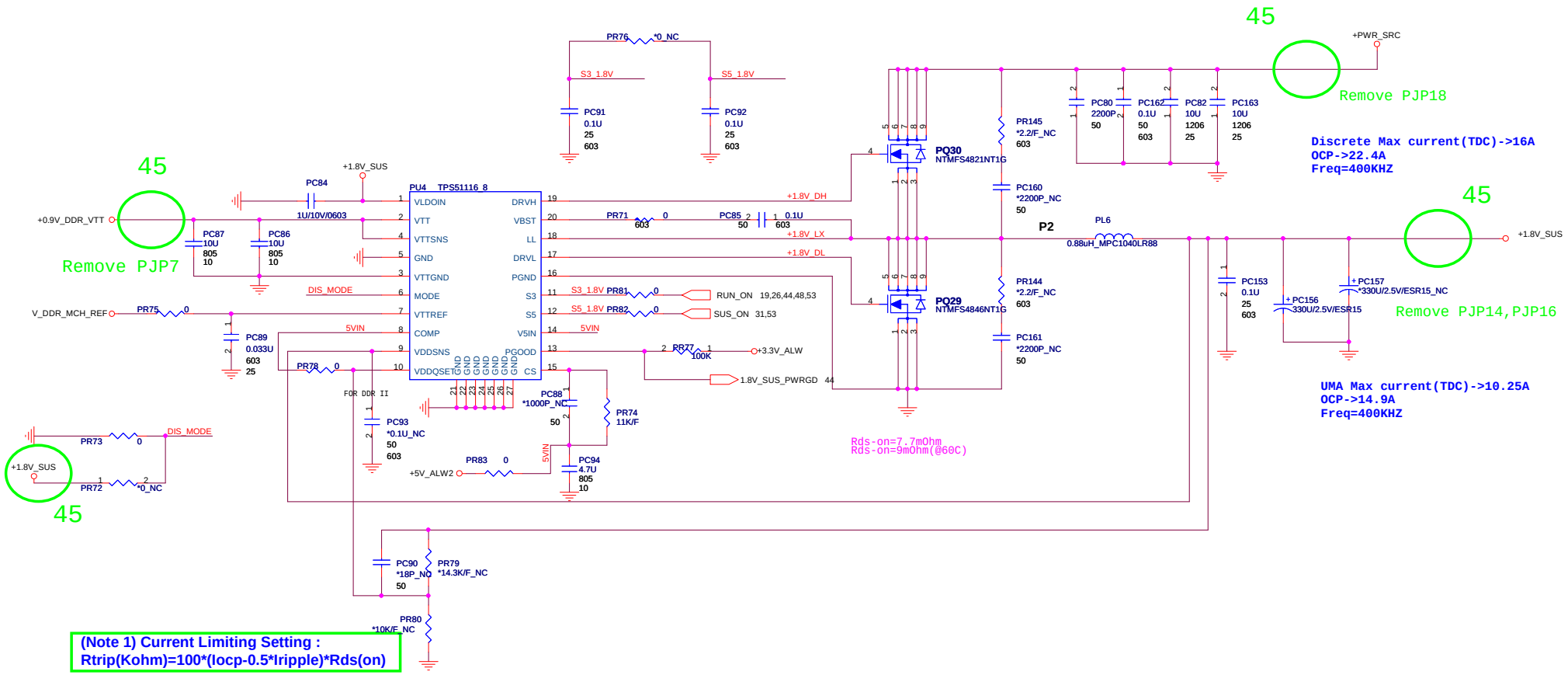

QUANTA COMPUTER			
Title	1.8VSUS & 0.9VTT (TPS51116)		
Size	Document Number FM8		Rev 2A
Date: Friday, November 21, 2008	Sheet 49 of 58		

WWW.AliSaler.Com

WWW.AliSaler.Com

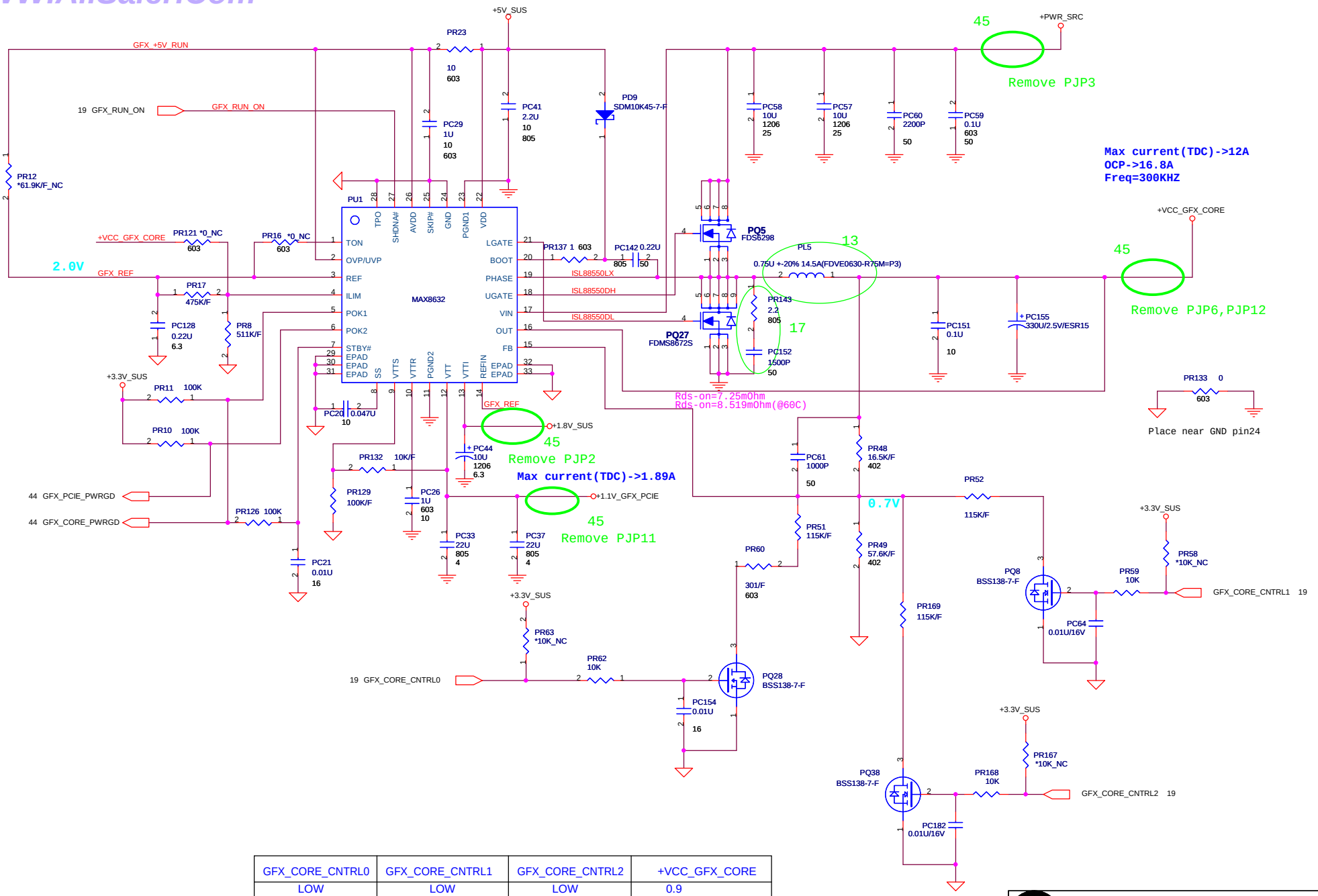

GFX_CORE_CNTRL0	GFX_CORE_CNTRL1	GFX_CORE_CNTRL2	+VCC_GFX_CORE
LOW	LOW	LOW	0.9
HIGH	LOW	LOW	1.0V
HIGH	HIGH	LOW	1.1V
HIGH	HIGH	HIGH	1.2V

QUANTA COMPUTER

Title	VGA DC/DC	
Size	Document Number FM8	Rev 2A
Date: Friday, November 21, 2008	Sheet 50 of 58	

WWW.AliSaler.Com

WWW.AliSaler.Com

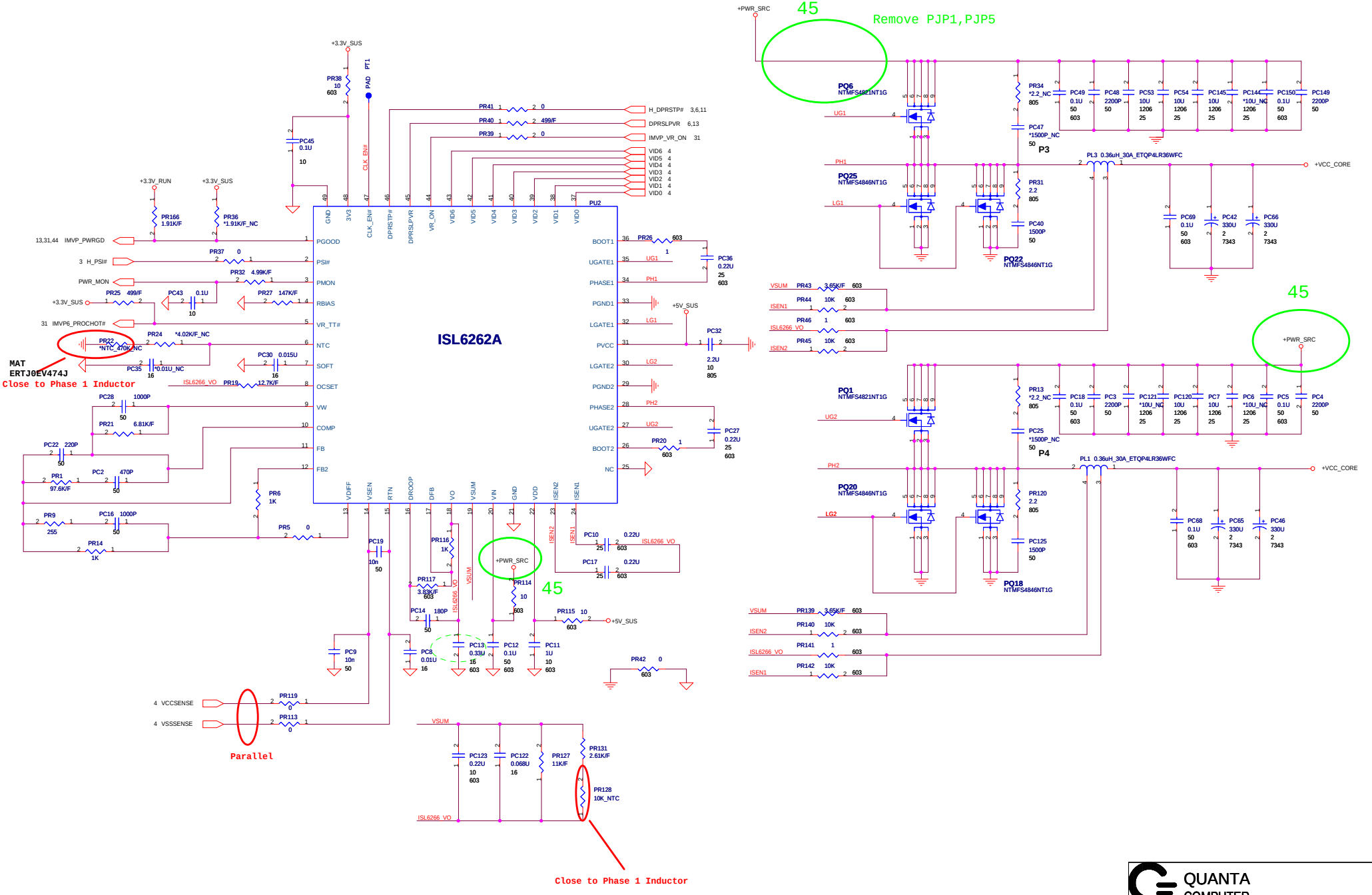

WWW.AliSaler.Com

QUANTA COMPUTER			
Title	CPU_Core_2Phase (ISL6266)		
Size	Document Number FM8		Rev 2A
Date: Friday, November 21, 2008		Sheet 51 of 58	

WWW.AliSaler.Com

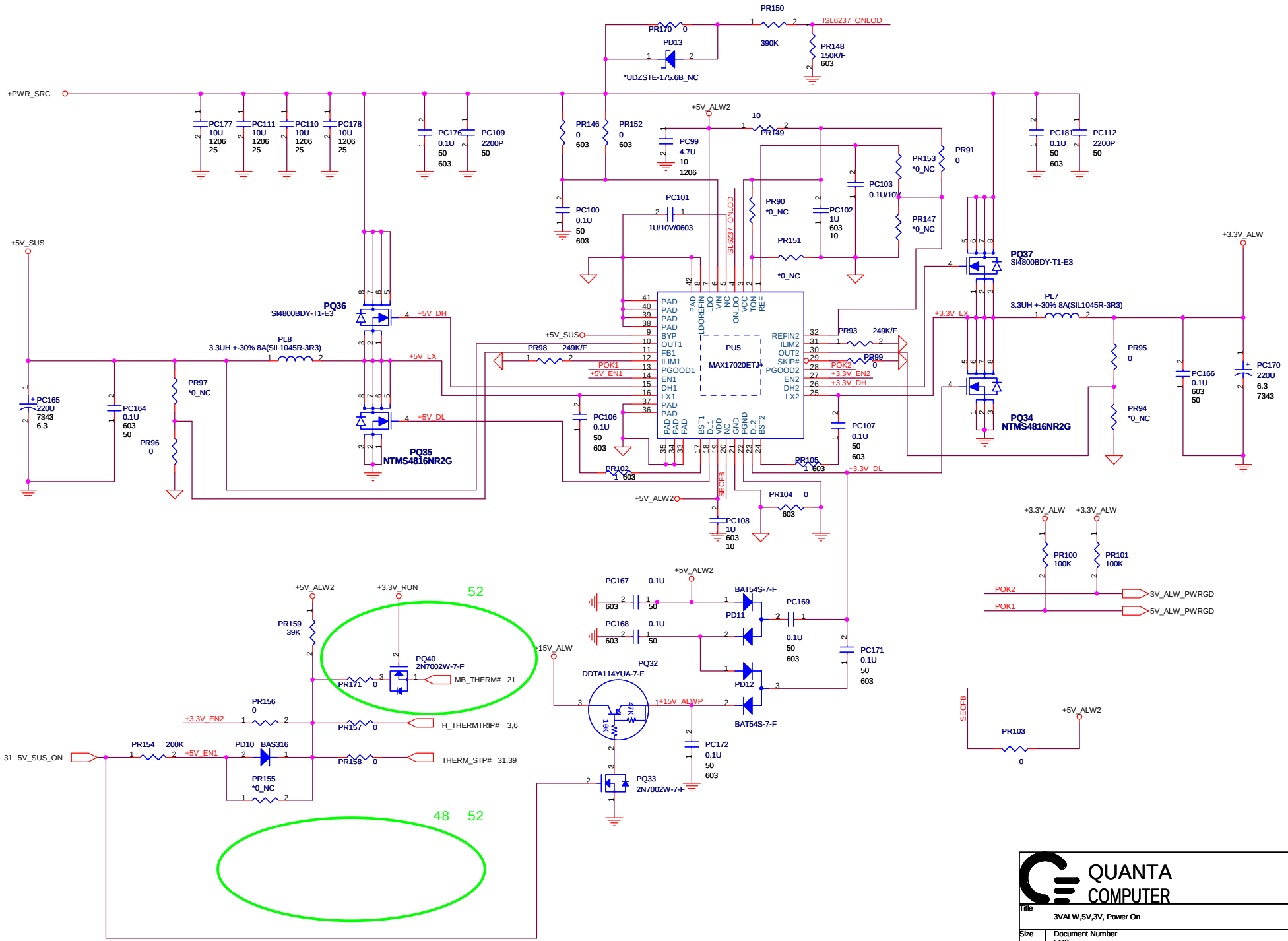

QUANTA COMPUTER

Title	3VALW,5V,3V, Power On	
Size	Document Number FM8	Rev 2A
Date: Friday, November 21, 2008	Sheet 52 of 58	

WWW.AliSaler.Com

WWW.AliSaler.Com

+5V_RUN
TDC : 2.78A

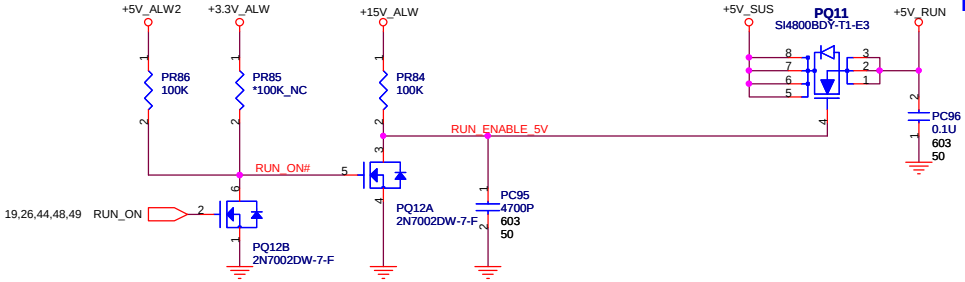

+3.3V_SUS
TDC : 0.44A

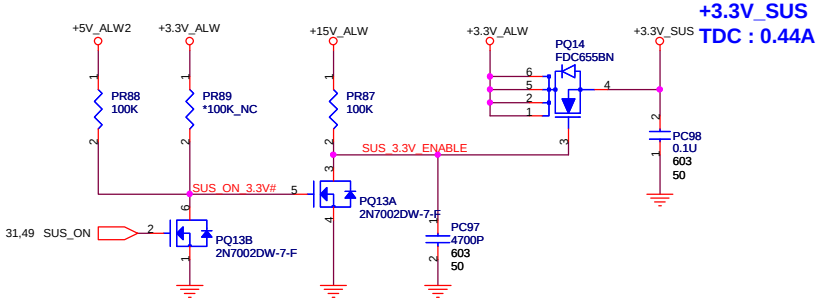

+1.8V_RUN
TDC : 3.87A

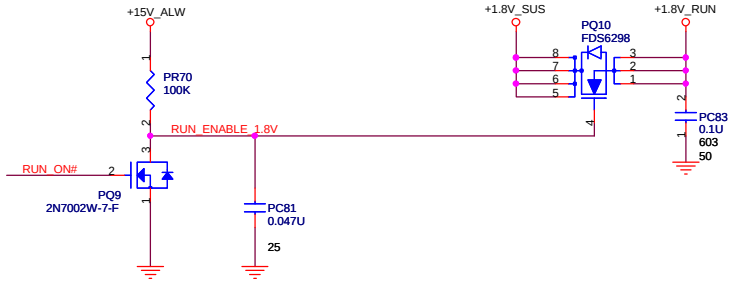

+3.3V_RUN
TDC : 5.23A

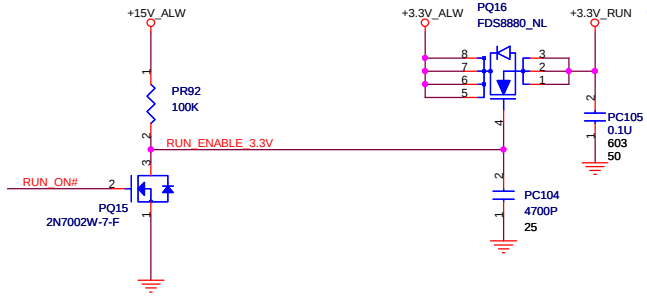

Reserve discharge path

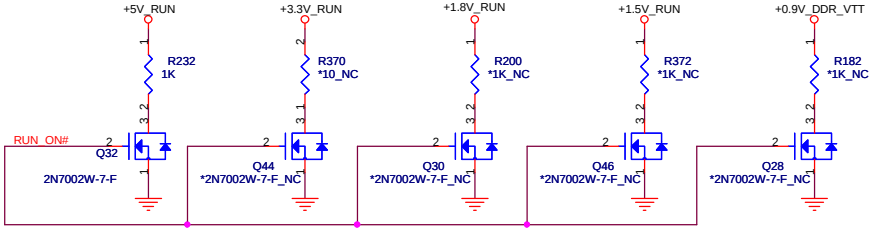

Reserve discharge path

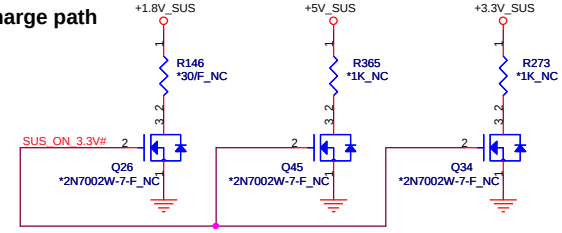

QUANTA COMPUTER

Title	RUN POWER SW	
Size	Document Number FM8	Rev 2A
Date: Friday, November 21, 2008	Sheet 53 of 58	

WWW.AliSaler.Com

WWW.AliSaler.Com

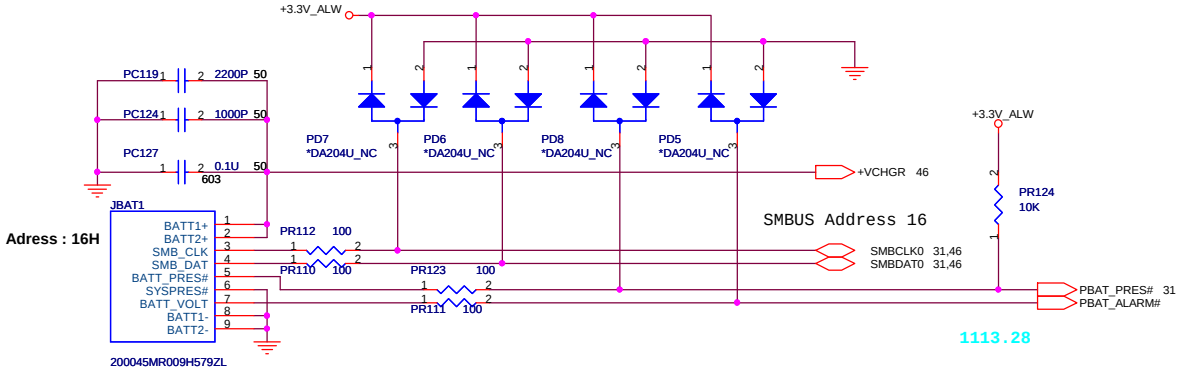

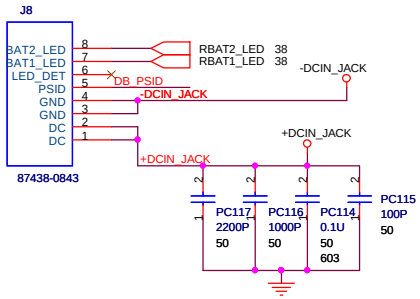

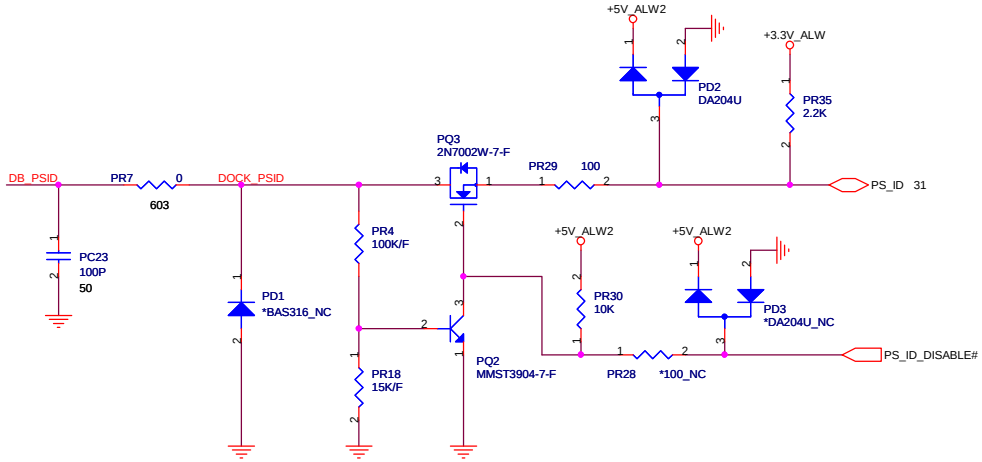

Change Value per GG updated

EMI requirement on 0812

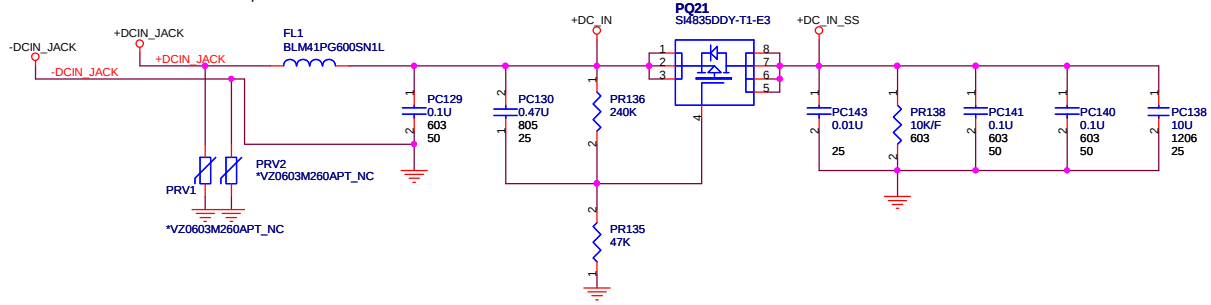

QUANTA COMPUTER

Title	DCIN,BATT CONNECTOR	
Size	Document Number FM8	Rev 2A
Date: Friday, November 21, 2008	Sheet 54 of 58	

WWW.AliSaler.Com

WWW.AliSaler.Com

FOR CPU use

H4 *H-C276D177P2_NC H-C276D157P2
H12 *H-C276D177P2_NC H-C276D157P2
H11 *H-C276D177P2_NC H-C276D157P2
H5 *H-C276D177P2_NC H-C276D177P2

TH2 H-TC118BC197D63P2
TH1 H-TC118BC197D63P2
TH3 H-TC118BC197D63P2

For MiniCard nut use. on 31' header

H3 *H-TC315BC394D79P2_NC H-TC315BC394D79P2
H1 *H-TC315BC394D126P2_NC H-TC315BC394D126P2
H20 *H-TC315BC394D126P2_NC H-TC315BC394D126P2
H15 *H-TC315BC335D126P2_NC H-TC315BC335D126P2

H14 *H-C256D154P2_NC H-C256D154P2
H10 *H-C256D154P2_NC H-C256D154P2

For GPU nut use.

H2 *o-o177x472d177x472n_NC o-o177x472d177x472n
H23 *H-TC315BC394D126P2_NC H-TC315BC394D126P2
H22 *H-TC315BC394D126P2_NC H-TC315BC394D126P2
H18 *h-fm8b-1_NC h-fm8b-1

PV1 *PAD138X98XH_NC GND
PV2 *PAD138X98XH_NC GND

H19 *H-TC315BC394D126P2_NC H-TC315BC394D126P2
H16 *H-TC315BC394D126P2_NC H-TC315BC394D126P2
H9 *H-TC315BC394D126P2_NC H-TC315BC394D126P2
H24 *h-TC256BC315D110P2_NC h-TC256BC315D110P2

H7 *h-tc256bc315d126p2_NC h-tc256bc315d126p2

H8 *H-C228D228N_NC H-C228D228N
H6 *H-C228D228N_NC H-C228D228N
H13 *H-C197D197N_NC H-C197D197N
H21 *H-C394D394N_NC H-C394D394N
H17 *H-TC256BC315D126P2_NC H-TC256BC315D126P2

WWW.AliSaler.Com

QUANTA COMPUTER

Title	SCREW PAD	
Size	Document Number FM8	Rev 2A
Date: Friday, November 21, 2008	Sheet 55 of 58	

WWW.AliSaler.Com

Reserved for EMI.

WWW.AliSaler.Com

QUANTA COMPUTER

Title	EMI CAP	
Size	Document Number FM8	Rev 2A
Date: Friday, November 21, 2008	Sheet 56 of 58	

WWW.AliSaler.Com

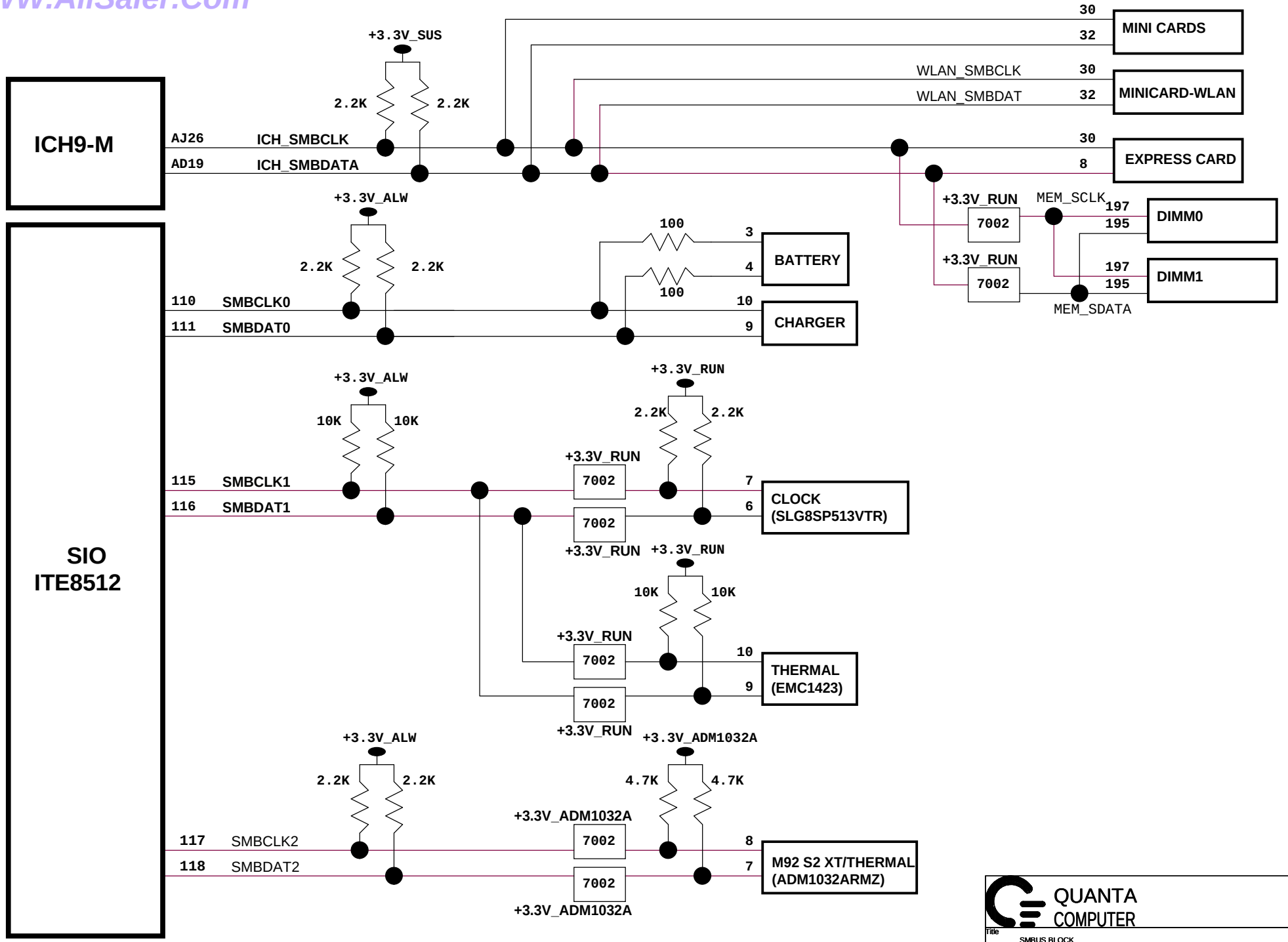

QUANTA COMPUTER

Title	SMBUS BLOCK	
Size	Document Number FM8	Rev 2A
Date: Friday, November 21, 2008	Sheet 57 of 59	

WWW.AliSaler.Com

WWW.AliSaler.Com

VER : 1A

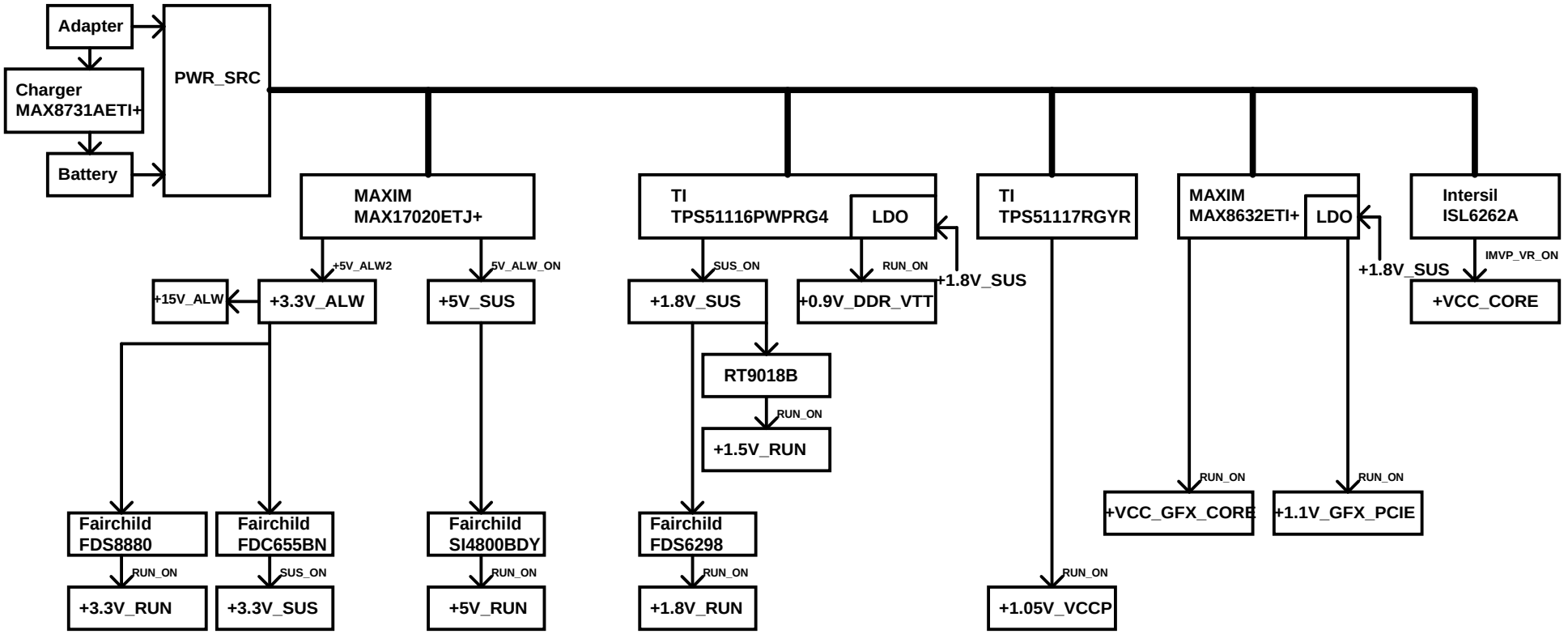

QUANTA COMPUTER

Title	Schematic Block Diagram1	
Size	Document Number FM8	Rev 2A
Date: Friday, November 21, 2008	Sheet 58 of 58	

WWW.AliSaler.Com